THUMB NUTS *Round Type*



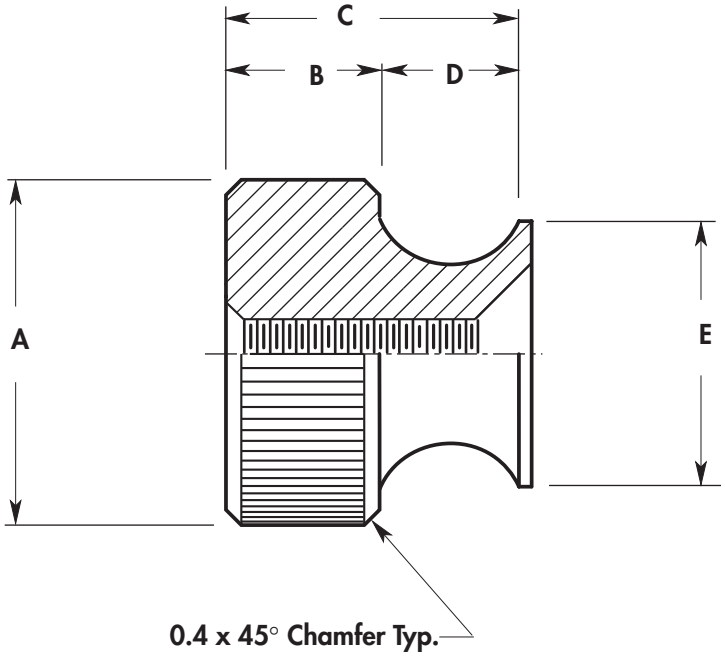

BASIC NO.	PART NO.	THREAD SIZE	A +0.5 -0.0	B ±0.5	C ±0.5	D ±0.5	E ±0.5
477	01	M2.5x0.45	6	3	6	3	5
477	02	M3x0.5	8	3	6	3	6
477	03	M3x0.6	10	3	7	4	9
477	04	M4x0.7	10	3	7	4	9
477	05	M5x0.8	13	4	9	5	11
477	06	M6x1	13	4	9	5	12
477	07	M8x1.25	19	6	12	6	16

MATERIAL	CODE
Aluminum	AL
Brass	BR
Stainless Steel	SS
Steel	ST

ORDERING INFORMATION

XXX–XX	XX	X
Basic No & Part No	Material	Finish
Example		
477–05	**SS**	✻

✻ For Finish Code See **Fold-Out** Inside Back Cover