HANDLES OFFSET ROUND *7.9mm Dia. • M4, M5 Int. Thd*

464
67-90

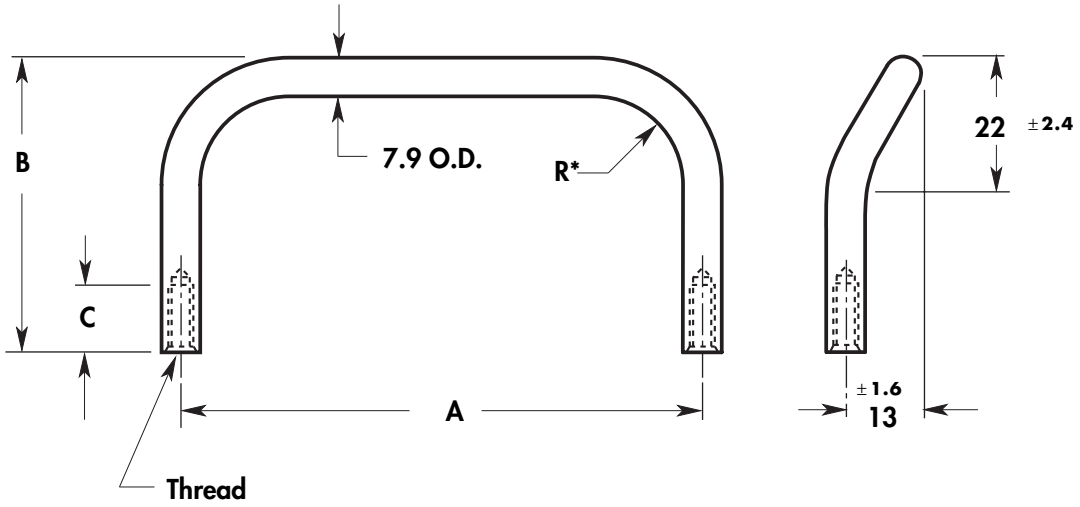

*R = Radius is Approximately the same as O.D. of Material

BASIC NO.	PART NO.	A ±1.0 LENGTH	B HEIGHT
464	67	25	33
464	68	64	
464	69	72	
464	70	102	
464	71	127	
464	72	152	
464	73	178	
464	74	203	
464	75	76	38
464	76	102	
464	77	108	
464	78	114	
464	79	116	
464	80	127	
464	81	140	
464	82	152	
464	83	76	44
464	84	102	
464	85	108	
464	86	114	
464	87	116	
464	88	127	
464	89	140	
464	90	152	

MATERIAL	CODE
Aluminum	AL
Brass	BR
Stainless Steel	SS
Steel	ST

THREAD	DEPTH C	CODE
M4x0.7	11	4
M5x0.8	13	5

ORDERING INFORMATION

XXX-XX	XX	XXXX	X
Basic No & Part No	Material	Thd	Finish
Example			
464-90	**AL**	**4**	✻

✻ For Finish Code Click Here