HANDLES FOLDING *Oval 180° 3 Position External Thread*

464 *11.1mm x 7.1mm • Thds. M8, M10*

507-538

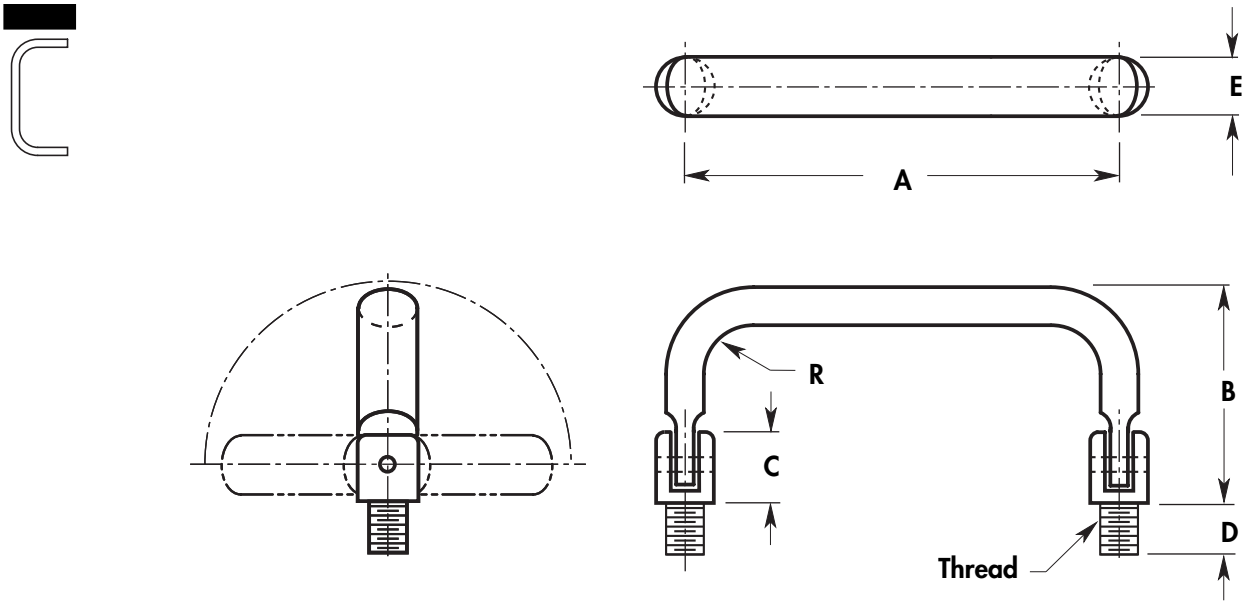

BASIC NO.	THD.	DIA.	C	D	E	R
464	M8x1.25 M10x1.5	**11.1 x 7.1**	14.3	15.9	11.1	12.7

MATERIAL	CODE
Aluminum	AL
Brass	BR
Stainless Steel	SS

THREAD	CODE
M8x1.25	8
M10x1.5	10

ORDERING INFORMATION

XXX-XX	XX	XXXX	X
Basic No & Part No	Material	Thd	Finish
Example			
464-520	**BR**	**10**	*

* For Finish Code Click Here

NOTE: Supplied With Nuts and Washers

BASIC NO.	PART NO.	A ±1.0 LENGTH	B HEIGHT
464	507	76	43
464	508	102	
464	509	108	
464	510	114	
464	511	127	
464	512	152	
464	513	178	
464	514	203	
464	515	76	45.5
464	516	102	
464	517	108	
464	518	114	
464	519	127	
464	520	152	
464	521	178	
464	522	203	
464	523	76	46.8
464	524	102	
464	525	108	
464	526	114	
464	527	127	
464	528	152	
464	529	178	
464	530	203	
464	531	76	54
464	532	102	
464	533	108	
464	534	114	
464	535	127	
464	536	152	
464	537	178	
464	538	203	