

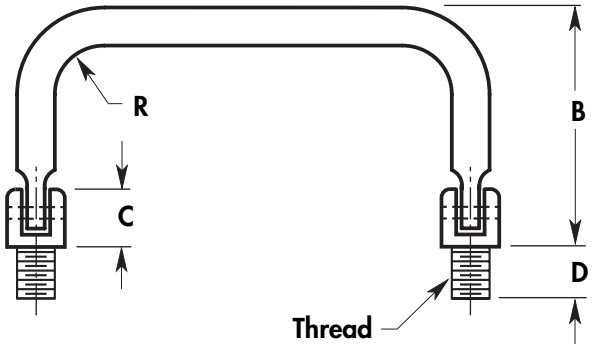

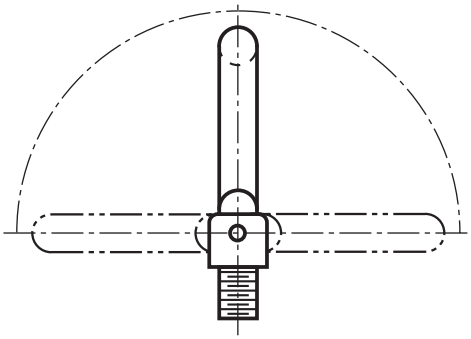

BASIC NO.	THD.	DIA.	C	D	E	R
464	M8x1.25 M10x1.5	**9.5**	12.7	15.9	15.9	9.5

BASIC NO.	PART NO.	A ±1.0 LENGTH	B HEIGHT
464	415	102	
464	416	108	
464	417	114	
464	418	127	**38.9**
464	419	152	
464	420	178	
464	421	203	
464	422	102	
464	423	108	
464	424	114	
464	425	127	**46**
464	426	152	
464	427	178	
464	428	203	

BASIC NO.	PART NO.	A ±1.0 LENGTH	B HEIGHT
464	429	102	
464	430	108	
464	431	114	
464	432	127	**47**
464	433	152	
464	434	178	
464	435	203	
464	436	102	
464	437	108	
464	438	114	
464	439	127	**60.3**
464	440	152	
464	441	178	
464	442	203	

MATERIAL	CODE
Aluminum	AL
Brass	BR
Stainless Steel	SS
Steel	ST

THREAD	CODE
M8x1.25	8
M10x1.5	10

ORDERING INFORMATION

XXX-XX	XX	XXXX	X
Basic No & Part No	Material	Thd	Finish
Example			
464-434	**AL**	**10**	*

* For Finish Code Click Here

NOTE: Supplied With Nuts and Washers