HANDLES FOLDING *Round 180° 3 Position External Thread*

464 *378-393 6.4mm Dia • Thds. M6, M8*

464 *394-414 7.9mm Dia • Thds. M8, M10*

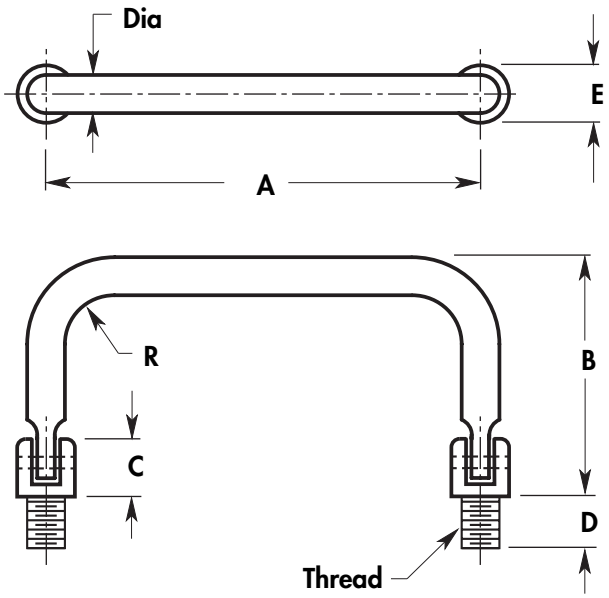

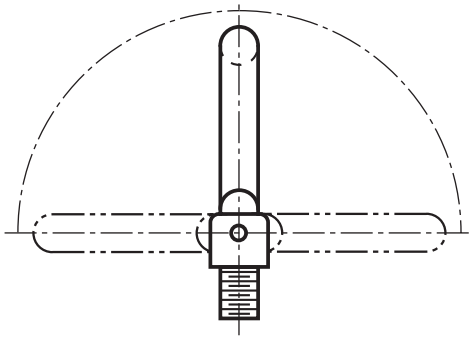

BASIC NO.	THD.	DIA.	C	D	E	R
464	M6x1.0 M8x1.25	**6.4**	8	14.3	11	6.4

BASIC NO.	THD.	DIA.	C	D	E	R
464	M8x1.25 M10x1.5	**7.9**	9.5	15.9	14.3	7.9

BASIC NO.	PART NO.	A LENGTH	B HEIGHT
464	378	102	**36.3**
464	379	108	
464	380	114	
464	381	127	
464	382	152	
464	383	178	
464	384	203	
464	385	227	
464	386	102	**37**
464	387	108	
464	388	114	
464	389	127	
464	390	152	
464	391	178	
464	392	203	
464	393	227	

BASIC NO.	PART NO.	A ±1.0 LENGTH	B HEIGHT
464	394	102	**36.3**
464	395	108	
464	396	114	
464	397	127	
464	398	152	
464	399	178	
464	400	203	
464	401	102	**38.9**
464	402	108	
464	403	114	
464	404	127	
464	405	152	
464	406	178	
464	407	203	
464	408	102	**47**
464	409	108	
464	410	114	
464	411	127	
464	412	152	
464	413	178	
464	414	203	

THREAD	CODE
M6x1.0	6
M8x1.25	8
M10x1.5	10

MATERIAL	CODE
Aluminum	AL
Brass	BR
Stainless Steel	SS
Steel	ST

ORDERING INFORMATION

XXX-XX	XX	XXXX	X
Basic No & Part No	Material	Thd	Finish
Example			
464-400	**AL**	**10**	✻

✻ For Finish Code Click Here

NOTE: Supplied With Nuts and Washers