

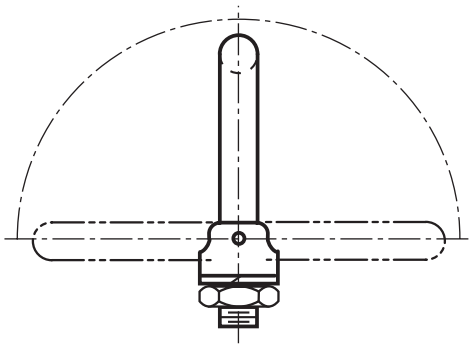

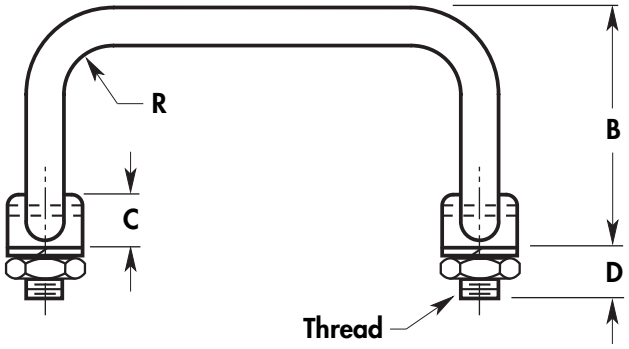

BASIC NO.	THD.	DIA.	C	D	E	R
464	M8x1.25 M10x1.5	**9.5**	12.7	9.5	15.9	9.5

BASIC NO.	PART NO.	A ±1.0 LENGTH	B HEIGHT
464	207	76	**38.9**
464	208	89	
464	209	102	
464	210	108	
464	211	114	
464	212	127	
464	213	152	
464	214	178	
464	215	203	
464	216	227	
464	217	76	**47**
464	218	89	
464	219	102	
464	220	108	
464	221	114	
464	222	127	
464	223	152	
464	224	178	
464	225	203	
464	226	227	

MATERIAL	CODE
Aluminum	AL
Brass	BR
Stainless Steel	SS
Steel	ST

THREAD	CODE
M8x1.25	8
M10x1.5	10

ORDERING INFORMATION

XXX-XX	XX	XXXX	X
Basic No & Part No	Material	Thd	Finish
Example			
464-220	**AL**	**10**	✻

✻ For Finish Code Click Here

NOTE: Supplied With Nuts and Washers