HANDLES FOLDING *Round 180° Free Fall External Thread*

464 *7.9mm Dia • Thds. M8, M10*

177-206

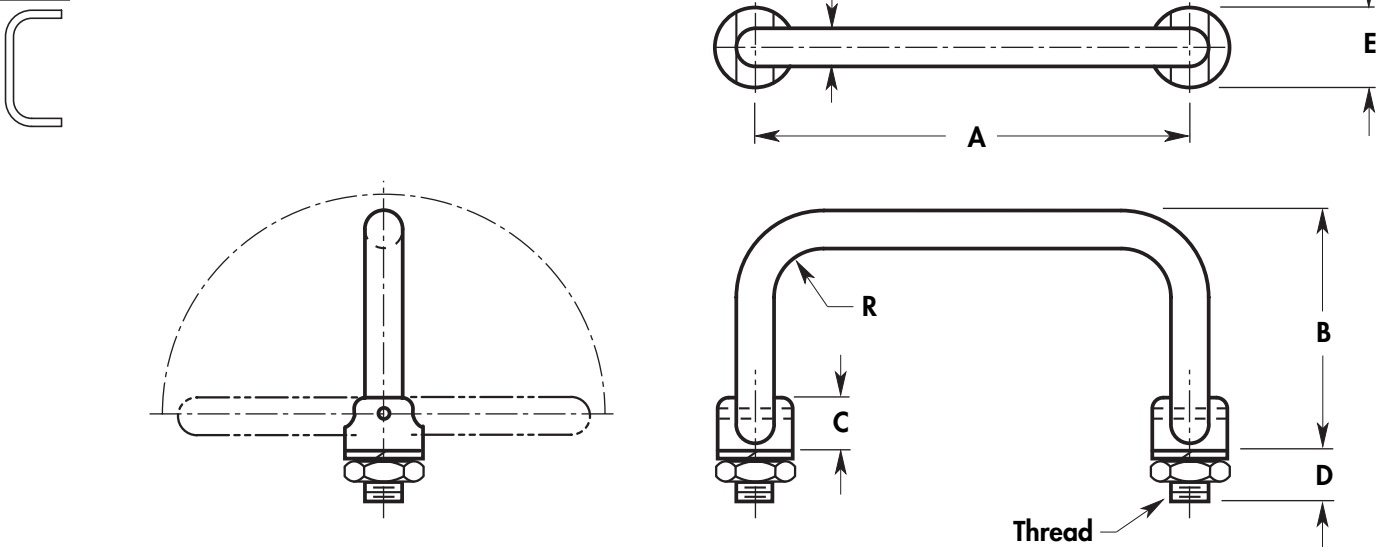

BASIC NO.	THD.	DIA.	C	D	E	R
464	M8x1.25 M10x1.5	**7.9**	11	9.5	14.3	7.9

BASIC NO.	PART NO.	A ±1.0 LENGTH	B HEIGHT
464	177	76	38.9
464	178	89	
464	179	102	
464	180	108	
464	181	114	
464	182	127	
464	183	152	
464	184	178	
464	185	203	
464	186	227	
464	187	76	41
464	188	89	
464	189	102	
464	190	108	
464	191	114	
464	192	127	
464	193	152	
464	194	178	
464	195	203	
464	196	227	
464	197	76	46
464	198	89	
464	199	102	
464	200	108	
464	201	114	
464	202	127	
464	203	152	
464	204	178	
464	205	203	
464	206	227	

MATERIAL	CODE
Aluminum	AL
Brass	BR
Stainless Steel	SS
Steel	ST

THREAD	CODE
M8x1.25	8
M10x1.5	10

ORDERING INFORMATION

XXX-XX	XX	XXXX	X
Basic No & Part No	Material	Thd	Finish
Example			
464-200	**SS**	**10**	✻

✻ For Finish Code Click Here

NOTE: Supplied With Nuts and Washers