PRECISION SHOULDER SCREWS *Socket Head*

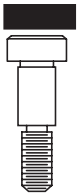

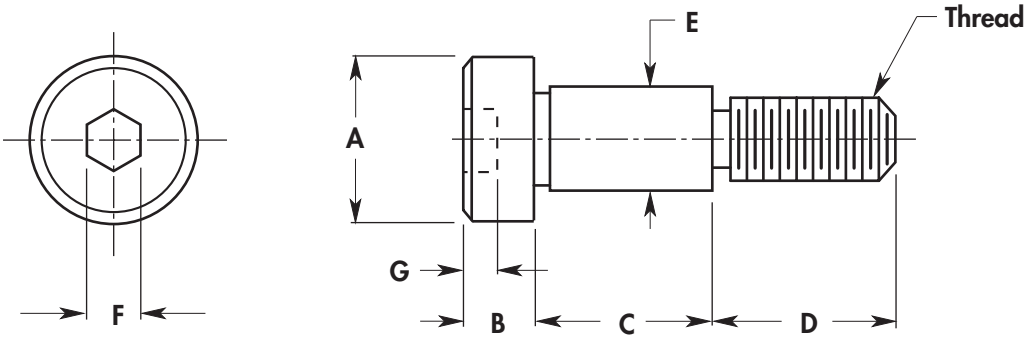

MATERIAL	CODE
Brass	BR
Stainless Steel	SS
Steel	ST

ORDERING INFORMATION

XXX–XX	XX	XXXX	X
Basic No & Part No	Material	Thd	Finish
Example			
292–10	**SS**	**832**	✻

✻ For Finish Code See **Fold-Out** Inside Back Cover

BASIC NO.	PART NO.	A ±1/64	B ±1/64	C + .002 - .000	D ±1/64	E + .000 - .001	F	THREAD SIZE	G MIN
292	01			.1255					
292	02			.1880					
292	03			.2505					
292	04	1/4	1/8	.3130	5/32	.1245	5/64	4-40	1/16
292	05			.3755					
292	23			.4375					
292	24			.5000					
292	25			.1255					
292	26			.1880					
292	27			.2505					
292	28			.3130					
292	29			.3755					
292	30	9/32	1/8	.4375	3/16	.1560	3/32	6 -32	5/64
292	31			.5000					
292	32			.5625					
292	33			.6250					
292	34			.6875					
292	35			.7500					
292	06			.1255					
292	07			.1880					
292	08			.2505					
292	09			.3130					
292	10			.3755					
292	36			.4375					
292	11			.5005					
292	37			.5625					
292	12	5/16	5/32	.6255	3/16	.1870	3/32	8-32	5/64
292	38			6875					
292	13			.7505					
292	39			.8750					
292	14			1.0005					
292	15			1.2505					
292	40			1.3750					
292	16			1.5005					
292	17			.1255					
292	18			.1880					
292	19			.2505					
292	20	3/8	3/16	.3130	1/4	.2495	1/8	10-32	3/32
292	21			.3755					
292	41			.4375					
292	22			.5005					

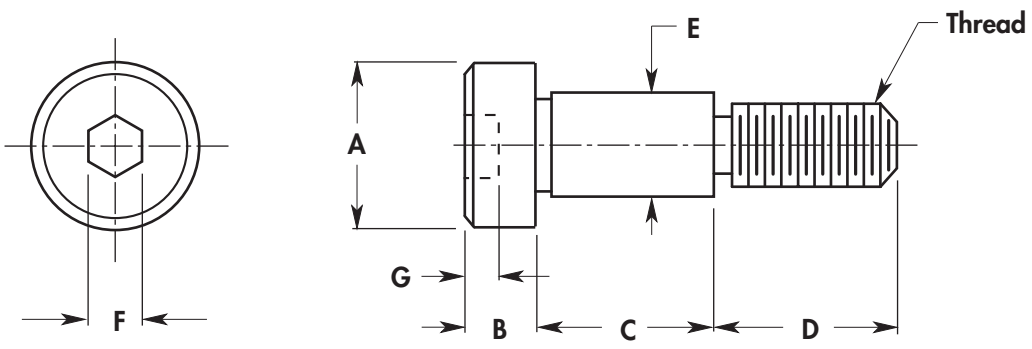

BASIC NO.	PART NO.	A ±1/64	B ±1/64	C + .002 - .000	D ±1/64	E + .000 - .001	F	THREAD SIZE	G MIN
293	24			.5625					
293	01			.6255					
293	25			.6875					
293	02			.7505					
293	26	3/8	3/16	.8750	1/4	.2495	1/8	10 -32	3/32
293	03			1.0005					
293	04			1.2505					
293	27			1.3750					
293	05			1.5005					
293	06			.2505		.3120			
293	07			.3130		.3120			
293	08			.3755		.3120			
293	09			.5005		.3120			
293	10			.6255		.3120			
293	11			.7505		.3120			
293	28			.8750		.3120			
293	29	7/16	7/32	1.0000	7/16	.3120	5/32	1/4-20	1/8
293	30			.2500		.3745			
293	12			.3130		.3745			
293	13			.3755		.3745			
293	14			.5005		.3745			
293	15			.6255		.3750			
293	31			.7500		.3750			
293	32			.8750		.3750			
293	33			1.0000		.3750			
293	34			.2500					
293	16			.3130					
293	17			.3755					
293	18	1/2	7/32	.5005	1/2	.3745	3/16	5/16-18	5/32
293	19			.6255					
293	35			.7500					
293	36			.8750					
293	37			1.0000					
293	38			.2500					
293	39			.3130					
293	40			.3755					
293	20	3/4	5/8	.5005	5/8	.4955	1/4	3/8-16	3/16
293	21			.6255					
293	22			.7505					
293	41			.8750					
293	23			1.0005					

MATERIAL	CODE
Brass	BR
Stainless Steel	SS
Steel	ST

ORDERING INFORMATION

XXX–XX	XX	XXXX	X
Basic No & Part No	Material	Thd	Finish
Example			
293–21	**SS**	**3/816**	✻

✻ For Finish Code See **Fold-Out** Inside Back Cover