

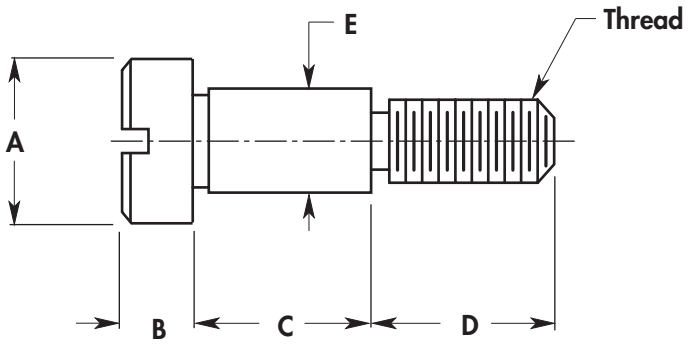

MATERIAL	CODE
Brass	BR
Stainless Steel	SS
Steel	ST

ORDERING INFORMATION

XXX–XX	XX	XXXX	X
Basic No & Part No	Material	Thd	Finish
Example			
290–13	**SS**	**832**	*

* For Finish Code See **Fold-Out** Inside Back Cover

BASIC NO.	PART NO.	A ±1/64	B ±1/64	C + .002 - .000	D ±1/64	E + .000 - .001	THREAD SIZE
290	01			.1255			
290	02			.1880			
290	03			.2505			
290	04	1/4	1/8	.3130	5/32	.1245	4-40
290	05			.3755			
290	23			.4375			
290	24			.5000			
290	25			.1250			
290	26			.1875			
290	27			.2500			
290	28			.3125			
290	29			.3750			
290	30	9/32	1/8	.4375	3/16	.1560	6-32
290	31			.5000			
290	32			.5625			
290	33			.6250			
290	34			.6875			
290	35			.7500			
290	06			.1255			
290	07			.1880			
290	08			.2505			
290	09			.3130			
290	10			.3755			
290	36			.4375			
290	11			.5005			
290	37	5/16	5/32	.5625	3/16	.1870	8-32
290	12			.6255			
290	38			.6875			
290	13			.7505			
290	39			.8750			
290	14			1.0005			
290	15			1.2505			
290	40			1.3750			
290	16			1.5005			
290	17			.1255			
290	18			.1880			
290	19			.2505			
290	20	3/8	3/16	.3130	1/4	.2495	10-32
290	21			.3755			
290	41			.4375			
290	22			.5005			

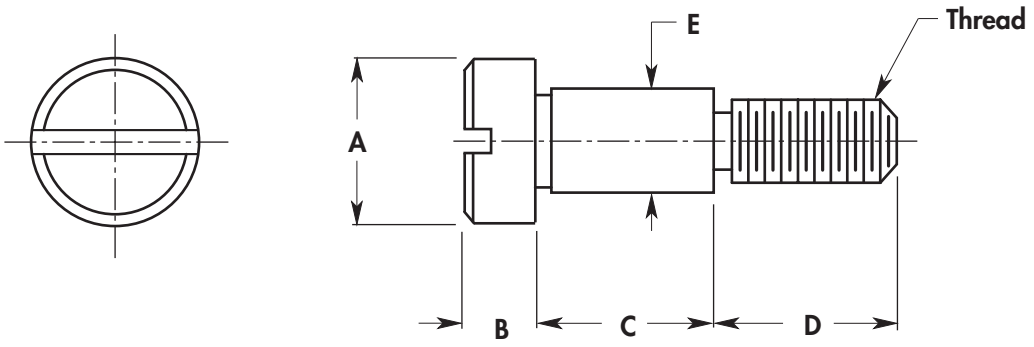

BASIC NO.	PART NO.	A ±1/64	B ±1/64	C + .002 - .000	D ±1/64	E + .000 - .001	THREAD SIZE
291	42			.5625			
291	01			.6255			
291	43			.6875			
291	02			.7505			
291	44	3/8	3/16	.8750	1/4	.2485	10 -32
291	03			1.0005			
291	04			1.2505			
291	45			1.3750			
291	05			1.5005			
291	06			.2505		.3120	
291	07			.3130		3120	
291	08			.3755		.3120	
291	09			.5005		.3120	
291	10			.6255		.3120	
291	11			.7505		.3120	
291	46			.8750		.3120	
291	47	7/16	7/32	1.0000	3/8	.3120	1/4-20
291	48			.2500		.3745	
291	12			.3130		.3745	
291	13			.3755		.3745	
291	14			.5005		.3745	
291	15			.6255		.3745	
291	49			.7500		.3745	
291	50			.8750		.3745	
291	51			1.0000		.3745	
291	52			.2500			
291	16			.3130			
291	17			.3755			
291	18	1/2	1/4	.5005	7/16	.3745	5/16-18
291	19			.6255			
291	53			.7500			
291	54			.8750			
291	55			1.0000			
291	56			.2500			
291	57			.3130			
291	58			.3755			
291	20	5/8	5/16	.5005	1/2	.4955	3/8-16
291	21			.6255			
291	22			.7505			
291	59			.8750			
291	23			1.0005			

MATERIAL	CODE
Brass	BR
Stainless Steel	SS
Steel	ST

ORDERING INFORMATION

XXX–XX	XX	XXXX	X
Basic No & Part No	Material	Thd	Finish
Example			
291–05	**SS**	**1032**	*

* For Finish Code See **Fold-Out** Inside Back Cover