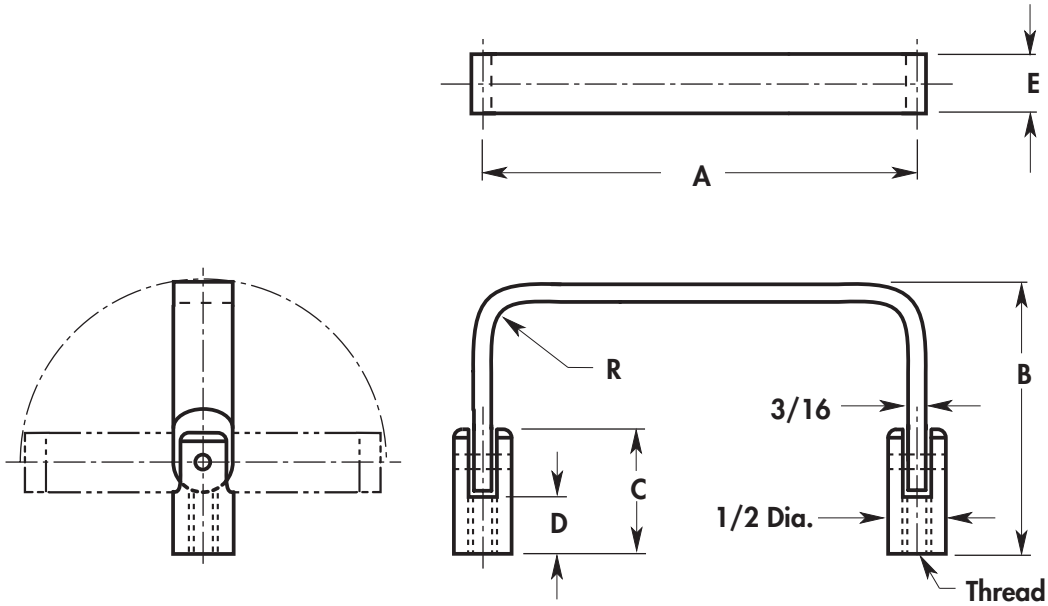

BASIC NO.	THD.	DIA.	C	D	E	R
284	8-32 10-32	**1/2 x 3/16**	15/16	7/16	1/2	3/8

BASIC NO.	PART NO.	A LENGTH	B HEIGHT
284	51	3"	1-1/2
284	52	3-3/4	
284	53	4"	
284	54	4-1/4	
284	55	4-1/2	
284	56	5"	
284	57	5-1/2	
284	58	6"	
284	59	3"	2"
284	60	3-3/4	
284	61	4"	
284	62	4-1/4	
284	63	4-1/2	
284	64	5"	
284	65	5-1/2	
284	66	6"	

MATERIAL	CODE
Aluminum	AL
Brass	BR

THREAD	CODE
8-32	832
10-32	1032

ORDERING INFORMATION

XXX–XX	XX	XXXX	X
Basic No & Part No	Material	Thd	Finish
Example			
284–57	**BR**	**832**	✻

✻ For Finish Code See **Fold-Out** Inside Back Cover