HANDLES FOLDING *Oval 180° Infinite Position Internal Thread*

280 *7/16 x 9/32 • Thds. 8-32, 10-32*
281 *7/16 x 9/32 • Thds. 8-32, 10-32*

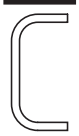

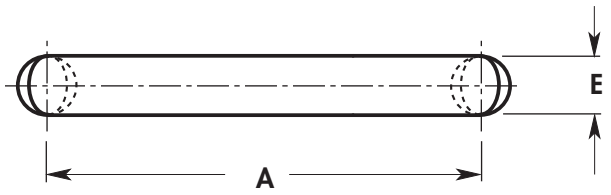

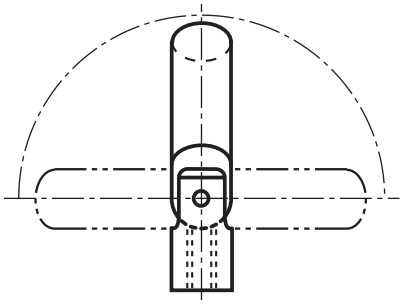

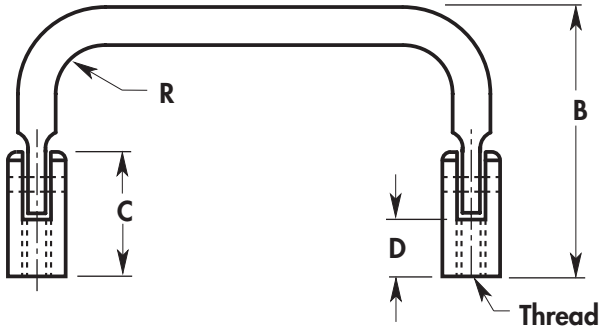

BASIC NO.	THD.	DIA.	C	D	E	R
280	8-32	**7/16 x 9/32**	7/8	7/16	7/16	1/2
	10-32	**7/16 x 9/32**	7/8	1/2	7/16	1/2

BASIC NO.	THD.	DIA.	C	D	E	R
281	8-32	**7/16 x 9/32**	7/8	7/16	7/16	1/2
	10-32	**7/16 x 9/32**	7/8	1/2	7/16	1/2

BASIC NO.	PART NO.	A LENGTH	B HEIGHT
280	01	3"	**1.695"**
280	02	4"	
280	03	4-1/4	
280	04	4-1/2	
280	05	5"	
280	06	6"	
280	07	7"	
280	08	8"	
280	09	3"	**1.791"**
280	10	4"	
280	11	4-1/4	
280	12	4-1/2	
280	13	5"	
280	14	6"	
280	15	7"	
280	16	8"	
280	17	3"	**1.843"**
280	18	4"	
280	19	4-1/4	
280	20	4-1/2	
280	21	5"	
280	22	6"	
280	23	7"	
280	24	8"	
280	25	3"	**2-1/8"**
280	26	4"	
280	27	4-1/4	
280	28	4-1/2	
280	29	5"	
280	30	6"	
280	31	7"	
280	32	8"	

BASIC NO.	PART NO.	A LENGTH	B HEIGHT
281	01	2"	**2"**
281	02	3"	
281	03	4"	
281	04	5"	
281	05	6"	
281	06	7"	
281	07	8"	
281	08	2"	**2-1/2"**
281	09	3"	
281	10	4"	
281	11	5"	
281	12	6"	
281	13	7"	
281	14	8"	
281	15	2"	**3"**
281	16	3"	
281	17	4"	
281	18	5"	
281	19	6"	
281	20	7"	
281	21	8"	

THREAD	CODE
8-32	832
10-32	1032

ORDERING INFORMATION

XXX–XX	XX	XXXX	X
Basic No & Part No	Material	Thd	Finish
Example			
280–22	**BR**	**832**	✻

✻ For Finish Code See **Fold-Out** Inside Back Cover

MATERIAL	CODE
Aluminum	AL
Brass	BR
Stainless Steel	SS