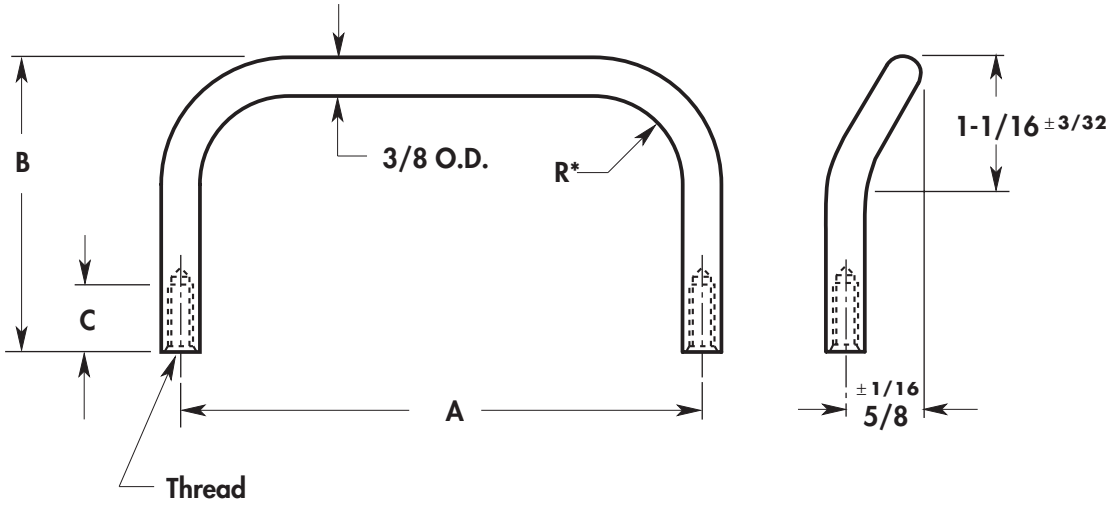

*R = Radius is Approximately the same as O.D. of Material

BASIC NO.	PART NO.	A LENGTH	B HEIGHT
249	65	3"	1-3/4"
249	66	4"	
249	67	4-1/4	
249	68	4-1/2	
249	69	4-9/16	
249	70	5"	
249	71	5-1/2	
249	72	6"	
249	73	3"	2"
249	74	4"	
249	75	4-1/4	
249	76	4-1/2	
249	77	4-9/16	
249	78	5"	
249	79	5-1/2	
249	80	6"	

MATERIAL	CODE
Aluminum	AL
Brass	BR
Stainless Steel	SS
Steel	ST

THREAD	DEPTH C	CODE
8-32	7/16	832
10-32	1/2	1032

ORDERING INFORMATION

XXX–XX	XX	XXXX	X
Basic No & Part No	Material	Thd	Finish
Example			
236–83	**SS**	**1032**	✻

✻ For Finish Code See **Fold-Out** Inside Back Cover