HANDLES OFFSET ROUND *5/16" Dia. • 8-32,10-32 Int. Thd*

249
41-64

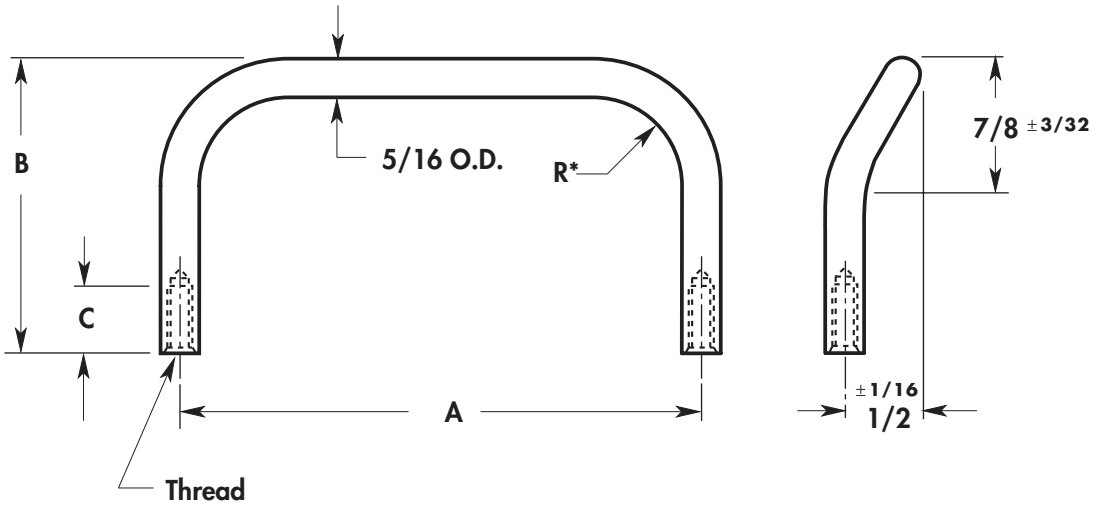

*R = Radius is Approximately the same as O.D. of Material

BASIC NO.	PART NO.	A LENGTH	B HEIGHT
249	41	2"	1-5/16"
249	42	2-1/2	
249	43	3"	
249	44	4"	
249	45	5"	
249	46	6"	
249	47	7"	
249	48	8"	
249	49	3"	1-1/2"
249	50	4"	
249	51	4-1/4	
249	52	4-1/2	
249	53	4-9/16	
249	54	5"	
249	55	5-1/2	
249	56	6"	
249	57	3"	1-3/4"
249	58	4"	
249	59	4-1/4	
249	60	4-1/2	
249	61	4-9/16	
249	62	5"	
249	63	5-1/2	
249	64	6"	

MATERIAL	CODE
Aluminum	AL
Brass	BR
Stainless Steel	SS
Steel	ST

THREAD	DEPTH C	CODE
8-32	7/16	832
10-32	1/2	1032

ORDERING INFORMATION

XXX–XX	XX	XXXX	X
Basic No & Part No	Material	Thd	Finish
Example			
236–58	**AL**	**1032**	✻

✻ For Finish Code See **Fold-Out** Inside Back Cover