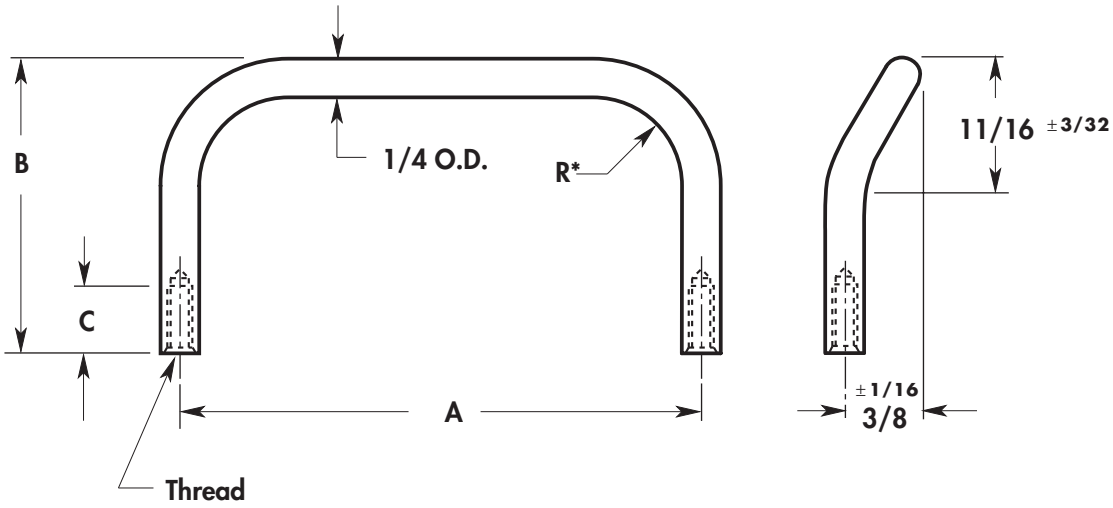

*R = Radius is Approximately the same as O.D. of Material

BASIC NO.	PART NO.	A LENGTH	B HEIGHT
249	17	2"	1"
249	18	2-1/2	
249	19	3"	
249	20	4"	
249	21	5"	
249	22	6"	
249	23	7"	
249	24	8"	
249	25	3"	1-1/2"
249	26	4"	
249	27	4-1/4	
249	28	4-1/2	
249	29	4-9/16	
249	30	5"	
249	31	5-1/2	
249	32	6"	
249	33	3"	2"
249	34	4"	
249	35	4-1/4	
249	36	4-1/2	
249	37	4-9/16	
249	38	5"	
249	39	5-1/2	
249	40	6"	

MATERIAL	CODE
Aluminum	AL
Brass	BR
Stainless Steel	SS
Steel	ST

THREAD	DEPTH C	CODE
6-32	3/8	632
8-32	7/16	832

ORDERING INFORMATION

XXX–XX	XX	XXXX	X
Basic No & Part No	Material	Thd	Finish
Example			
236–37	**BR**	**832**	*

* For Finish Code See **Fold-Out** Inside Back Cover