HANDLES OFFSET ROUND *3/16" Dia. • 4-40,6-32 Int. Thd*

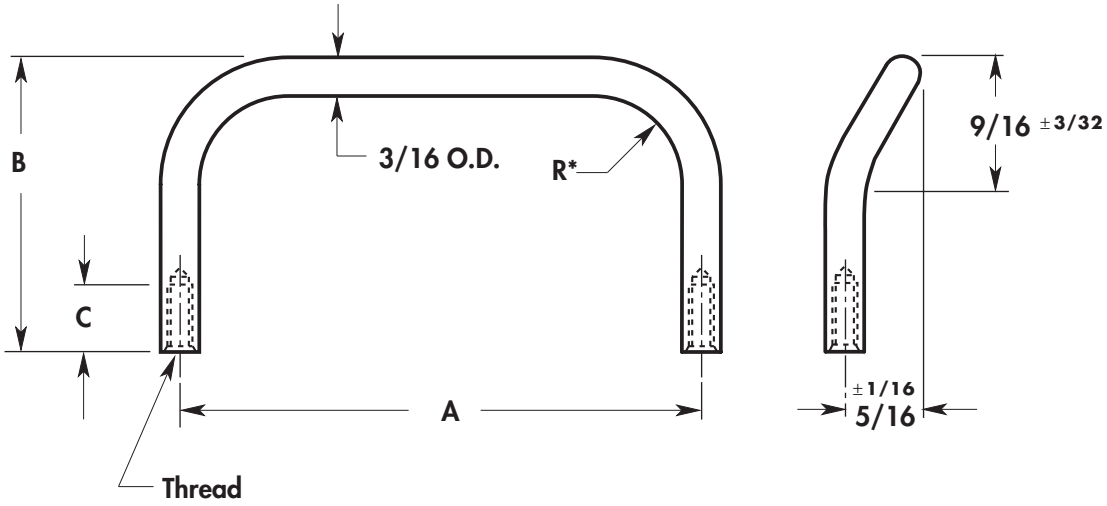

*R = Radius is Approximately the same as O.D. of Material

BASIC NO.	PART NO.	A LENGTH	B HEIGHT
249	01	2"	1"
249	02	3"	
249	03	4"	
249	04	4-1/2	
249	05	5"	
249	06	6"	
249	07	7"	
249	08	8"	
249	09	2"	1-1/2"
249	10	3"	
249	11	4"	
249	12	4-1/2	
249	13	5"	
249	14	6"	
249	15	7"	
249	16	8"	

MATERIAL	CODE
Aluminum	AL
Brass	BR
Stainless Steel	SS
Steel	ST

THREAD	DEPTH C	CODE
4-40	1/4	440
6-32	3/8	632

ORDERING INFORMATION

XXX–XX	XX	XXXX	X
Basic No & Part No	Material	Thd	Finish
Example			
236–19	**SS**	**632**	✻

✻ For Finish Code See **Fold-Out** Inside Back Cover