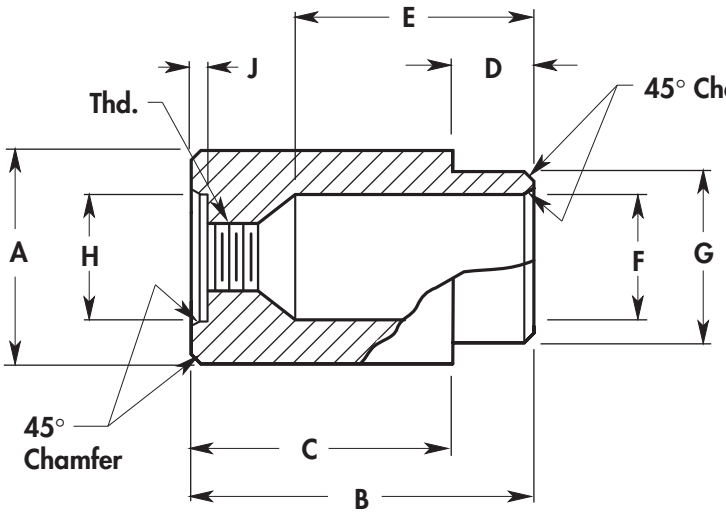

Typical Application

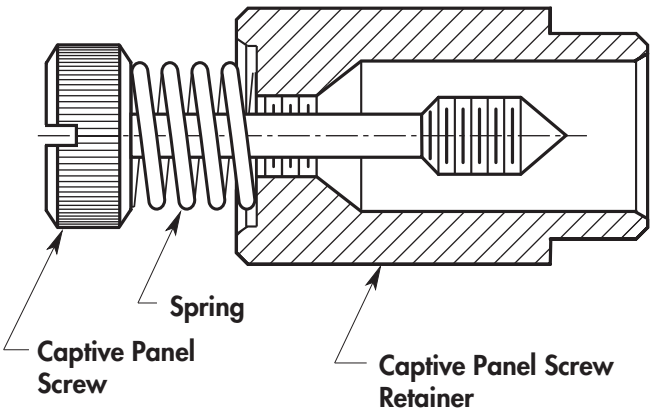

BASIC NO.	PART NO.	THD. SIZE	PANEL THICKNESS	A ±.004	B ±.010	C ±.005	D ±.005	E ±.005	F +.004 -.001	G +.000 -.003	H +.005 -.000	J +.010 -.000
221	01	4-40	.052-.067	9/32	7/16	.375	.062	.263	.210	.250	.192	.078
221	02	4-40	.084-.099	9/32	7/16	.344	.093	.263	.210	.250	.192	.078
221	03	4-40	.109-.140	9/32	7/16	.312	.125	.263	.210	.250	.192	.078
221	04	4-40	.171-.203	9/32	7/16	.250	.187	.263	.210	.250	.192	.078
221	05	4-40	.234-.265	9/32	7/16	.187	.250	.263	.210	.250	.192	.078
221	06	6-32	.052-.067	9/32	7/16	.375	.062	.266	.210	.250	.192	.078
221	07	6-32	.084-.099	9/32	7/16	.344	.093	.266	.210	.250	.192	.078
221	08	6-32	.109-.140	9/32	7/16	.312	.125	.266	.210	.250	.192	.078
221	09	6-32	.171-.203	9/32	7/16	.250	.187	.266	.210	.250	.192	.078
221	10	6-32	.234-.265	9/32	7/16	.187	.250	.266	.210	.250	.192	.078
221	11	8-32	.052-.067	17/32	5/8	.562	.062	.388	.386	.433	.312	.093
221	12	8-32	.084-.099	17/32	5/8	.532	.093	.388	.386	.433	.312	.093
221	13	8-32	.109-.140	17/32	5/8	.500	.125	.388	.386	.433	.312	.093
221	14	8-32	.171-.203	17/32	5/8	.437	.187	.388	.386	.433	.312	.093
221	15	8-32	.234-.265	17/32	5/8	.375	.250	.388	.386	.433	.312	.093
221	16	10-24	.052-.067	17/32	5/8	.562	.062	.393	.386	.433	.312	.093
221	17	10-24	.084-.099	17/32	5/8	.532	.093	.393	.386	.433	.312	.093
221	18	10-24	.109-.140	17/32	5/8	.500	.125	.393	.386	.433	.312	.093
221	19	10-24	.171-.203	17/32	5/8	.437	.187	.393	.386	.433	.312	.093
221	20	10-24	.234-.265	17/32	5/8	.375	.250	.393	.386	.433	.312	.093
221	21	12-24	.052-.067	17/32	5/8	.562	.062	.397	.386	.433	.312	.093
221	22	12-24	.084-.099	17/32	5/8	.532	.093	.397	.386	.433	312	.093
221	23	12-24	.109-.140	17/32	5/8	.500	.125	.397	.386	.433	.312	.093
221	24	12-24	.171-.203	17/32	5/8	.437	.187	.397	.386	.433	.312	.093
221	25	12-24	.234-.265	17/32	5/8	.375	.250	.397	.386	.433	.312	.093
221	26	1/4-20	.052-.067	17/32	5/8	.562	.062	.405	.386	.433	.312	.093
221	27	1/4-20	.084-.099	17/32	5/8	.532	.093	.405	.386	.433	.312	.093
221	28	1/4-20	.109-.140	17/32	5/8	.500	.125	.405	.386	.433	.312	.093
221	29	1/4-20	.171-.203	17/32	5/8	.437	.187	.405	.386	.433	.312	.093
221	30	1/4-20	.234-.265	17/32	5/8	.375	.250	.405	.386	.433	.312	.093

ORDERING INFORMATION

XXX–XX	XX	XXXX	X
Basic No & Part No	Material	Thd	Finish
Example			
221–10	**SS**	**632**	✻

✻ For Finish Code See **Fold-Out** Inside Back Cover

MATERIAL	CODE
Brass	BR
Stainless Steel	SS
Steel	ST