PANEL SCREW RETAINER *TYPE 2-NF SERIES*

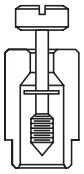

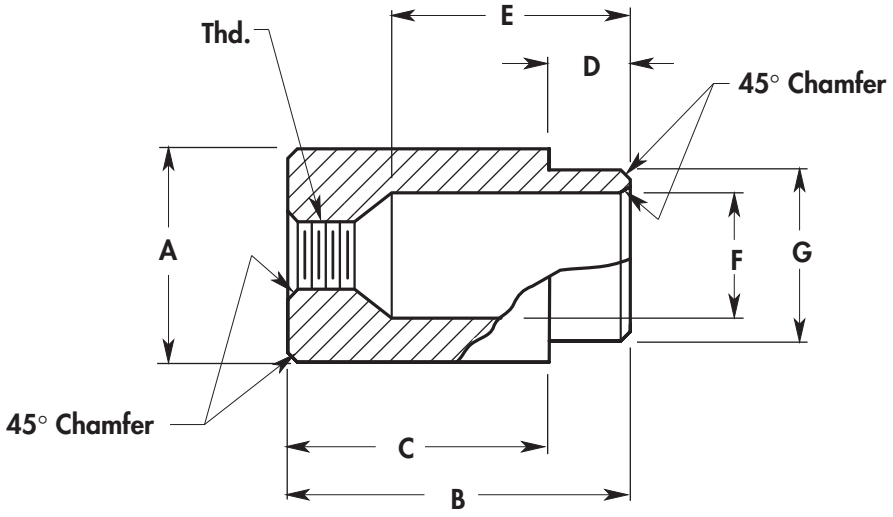

BASIC NO.	PART NO.	THD. SIZE	PANEL THICKNESS	A ±.004	B ±.010	C ±.005	D ±.005	E ±.005	F +.004 -.001	G +.000 -.003
218	01	10-32	.052-.067	3/8	3/8	.312	.062	.236	.228	.270
218	02	10-32	.084-.099	3/8	3/8	.281	.093	.236	.228	.270
218	03	10-32	.109-.140	3/8	3/8	.250	.125	.236	228	.270
218	04	10-32	.171-.203	3/8	3/8	.188	.187	.236	.228	.270
218	05	10-32	.234-.265	3/8	3/8	.125	.250	.236	.228	.270
218	06	10-32	.052-.067	17/32	9/16	.500	.062	.395	.386	.433
218	07	10-32	.084-.099	17/32	9/16	.468	.093	.395	.386	.433
218	08	10-32	.109-.140	17/32	9/16	.437	.125	.395	.386	.433
218	09	10-32	.171-.203	17/32	9/16	.375	.187	.395	.386	.433
218	10	10-32	.234-.265	17/32	9/16	.312	.25	.395	.386	.433
218	11	10-32	.109-.140	9/16	.477	.312	.165	.252	.343	.406
218	12	10-32	.171-.203	9/16	.542	.312	.230	.318	.343	.406
218	13	10-32	.234-.265	9/16	.602	.312	.290	.378	.343	.406
218	14	1/4-28	.052-.067	1/2	7/16	.375	.062	.295	.295	.356
218	15	1/4-28	.084-.099	1/2	7/16	.343	.093	.295	.295	.356
218	16	1/4-28	.109-.140	1/2	7/16	.312	.125	.295	.295	.356
218	17	1/4-28	.171-.203	1/2	7/16	.250	.187	.295	.295	.356
218	18	1/4-28	.234-.265	1/2	7/16	.187	.250	.295	.295	.356
218	19	1/4-28	.052-.067	17/32	9/16	.500	.062	.403	.386	.433
218	20	1/4-28	.084-.099	17/32	9/16	.468	.093	.403	.386	.433
218	21	1/4-28	.109-.140	17/32	9/16	.437	.125	.403	.386	.433
218	22	1/4-28	.171-.203	17/32	9/16	.375	.187	.403	.386	.433
218	23	1/4-28	.234-.265	17/32	9/16	.312	.250	.403	.386	.433
218	24	5/16-24	.052-.067	1/2	7/16	.375	.062	.297	.343	.404
218	25	5/16-24	.084-.099	1/2	7/16	.343	.093	.297	.343	.404
218	26	5/16-24	.109-.140	1/2	7/16	.312	.125	.297	.343	.404
218	27	5/16-24	.171-.203	1/2	7/16	.250	.187	.297	.343	.404
218	28	5/16-24	.234-.265	1/2	7/16	.187	.250	.297	.343	.404

MATERIAL	CODE
Brass	BR
Stainless Steel	SS
Steel	ST

ORDERING INFORMATION

XXX–XX	XX	XXXX	X
Basic No & Part No	Material	Thd	Finish
Example			
218–10	**SS**	**1032**	✻

✻ For Finish Code See **Fold-Out** Inside Back Cover