PANEL SCREW RETAINER *TYPE 2-NC SERIES*

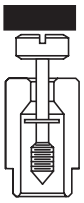

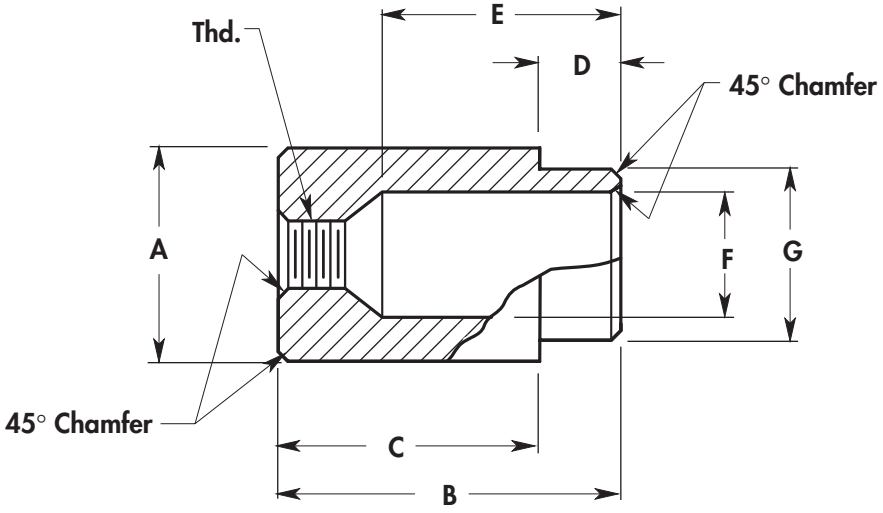

BASIC NO.	PART NO.	THD. SIZE	PANEL THICKNESS	A ±.004	B ±.010	C ±.005	D ±.005	E ±.005	F +.004 -.001	G +.000 -.003
215	01	4-40	.052-.067	1/4	1/4	.188	.062	.161	.150	.188
215	02	4-40	.084-.099	1/4	1/4	.156	.093	.161	.150	.188
215	03	4-40	.109-.140	1/4	1/4	.125	.125	.161	.150	.188
215	04	4-40	.052-.067	9/32	3/8	.312	.062	.263	.210	.250
215	05	4-40	.084-.099	9/32	3/8	.281	.093	.263	.210	.250
215	06	4-40	.109-.140	9/32	3/8	.250	.125	.263	.210	.250
215	07	4-40	.171-.203	9/32	3/8	.187	.187	.263	.210	.250
215	08	6-32	.052-.067	1/4	5/16	.250	.062	.210	.150	.188
215	09	6-32	.084-.099	1/4	5/16	.218	.093	.210	.150	.188
215	10	6-32	.109-.140	1/4	5/16	.187	.125	.210	.150	.188
215	11	6-32	.171-.203	1/4	5/16	.125	.187	.210	.150	.188
215	12	6-32	.052-.067	9/32	3/8	.312	.062	.265	.210	.250
215	13	6-32	.084-.099	9/32	3/8	.281	.093	.265	.210	.250
215	14	6-32	.109-.140	9/32	3/8	.250	.125	.265	.210	.250
215	15	6-32	.171-.203	9/32	3/8	.187	.187	.265	.210	.250
215	16	6-32	.234-.265	9/32	3/8	.125	.250	.265	.210	.250
215	17	6-32	.109-.140	9/16	.477	.312	.165	.242	.343	.406
215	18	6-32	.171-.203	9/16	.542	.312	.230	.307	.343	.406
215	19	6-32	.234-.265	9/16	.602	.312	.290	.367	.343	.406
215	20	8-32	.052-.067	3/8	5/16	.250	.062	.210	.188	.218
215	21	8-32	.084-.099	3/8	5/16	.218	.093	.210	.188	.218
215	22	8-32	.109-.140	3/8	5/16	.187	.125	.210	.188	.218
215	23	8-32	.171-.203	3/8	5/16	.125	.187	.210	.188	.218
215	24	8-32	.052-.067	17/32	9/16	.500	.062	.388	.386	.433
215	25	8-32	.084-.099	17/32	9/16	.468	.093	.388	.386	.433
215	26	8-32	.109-.140	17/32	9/16	.437	.125	.388	.386	.433
215	27	8-32	.171-.203	17/32	9/16	.375	.187	.388	.386	.433
215	28	8-32	.234-.265	17/32	9/16	.312	.250	.388	.386	.433
215	29	8-32	.109-.140	9/16	.477	.312	.165	.248	.343	.406
215	30	8-32	.171-.203	9/16	.542	.312	.230	.315	.343	.406
215	31	8-32	.234-.265	9/16	.602	.312	.290	.373	.343	.406

MATERIAL	CODE
Brass	BR
Stainless Steel	SS
Steel	ST

ORDERING INFORMATION

XXX–XX	XX	XXXX	X
Basic No & Part No	Material	Thd	Finish
Example			
215–28	**BR**	**832**	*

* For Finish Code See **Fold-Out** Inside Back Cover

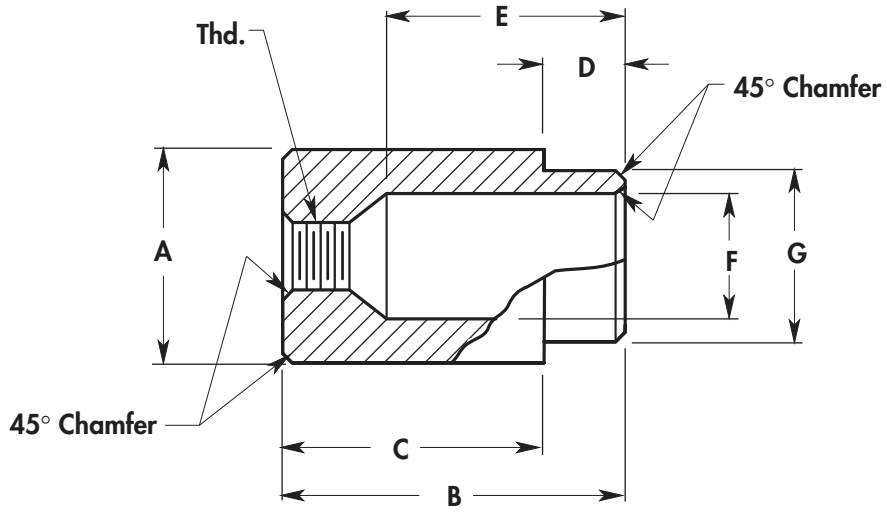

BASIC NO.	PART NO.	THD. SIZE	PANEL THICKNESS	A ±.004	B ±.010	C ±.005	D ±.005	E ±.005	F +.004 -.001	G +.000 -.003
216	01	10-24	.052-.067	3/8	3/8	.312	.062	.236	.228	.270
216	02	10-24	.084-.099	3/8	3/8	.281	.093	.236	.228	.270
216	03	10-24	.109-.140	3/8	3/8	.250	.125	.236	228	.270
216	04	10-24	.171-.203	3/8	3/8	.188	.187	.236	.228	.270
216	05	10-24	.234-.265	3/8	3/8	.125	.250	.236	.228	.270
216	06	10-24	.052-.067	17/32	9/16	.500	.062	.395	.386	.433
216	07	10-24	.084-.099	17/32	9/16	.468	.093	.395	.386	.433
216	08	10-24	.109-.140	17/32	9/16	.437	.125	.395	.386	.433
216	09	10-24	.171-.203	17/32	9/16	.375	.187	.395	.386	.433
216	10	10-24	.234-.265	17/32	9/16	.312	.250	.395	.386	.433
216	11	12-24	.052-.067	3/8	3/8	.312	.062	.239	.228	.270
216	12	12-24	.084-.099	3/8	3/8	.281	.093	.239	.228	.270
216	13	12-24	.109-.140	3/8	3/8	.250	.125	.239	.228	.270
216	14	12-24	.171-.203	3/8	3/8	.188	.187	.239	.228	.270
216	15	12-24	.234-.265	3/8	3/8	.125	.250	.239	.228	.270
216	16	12-24	.052-.067	17/32	9/16	.500	.062	.396	.386	.433
216	17	12-24	.084-.099	17/32	9/16	.468	.093	.396	.386	.433
216	18	12-24	.109-.140	17/32	9/16	.437	.125	.396	.386	.433
216	19	12-24	.171-.203	17/32	9/16	.375	.187	.396	.386	.433
216	20	12-24	.234-.265	17/32	9/16	.312	.250	.396	.386	.433
216	21	12-24	.109-.140	9/16	.477	.312	.165	.256	.343	.406
216	22	12-24	.171-.203	9/16	.542	.312	.230	.321	.343	.406
216	23	12-24	.234-.265	9/16	.602	.312	.290	.381	.343	.406
217	01	1/4-20	.052-.067	1/2	7/16	.375	.062	.295	.295	.356
217	02	1/4-20	.084-.099	1/2	7/16	.343	.093	.295	.295	.356
217	03	1/4-20	.109-.140	1/2	7/16	.312	.125	.295	.295	.356
217	04	1/4-20	.171-.203	1/2	7/16	.250	.187	.295	.295	.356
217	05	1/4-20	.234-.265	1/2	7/16	.187	.250	.295	.295	.356
217	06	1/4-20	.052-.067	17/32	9/16	.500	.062	.403	.386	.433
217	07	1/4-20	.084-.099	17/32	9/16	.468	.093	.403	.386	.433
217	08	1/4-20	.109-.140	17/32	9/16	.437	.125	.403	.386	.433
217	09	1/4-20	.171-.203	17/32	9/16	.375	.187	.403	.386	.433
217	10	1/4-20	.234-.265	17/32	9/16	.312	.250	.403	.386	.433
217	11	1/4-20	.109-.140	9/16	.477	.312	.165	.261	.343	.406
217	12	1/4-20	.171-.203	9/16	.542	.312	.230	.326	.343	.406
217	13	1/4-20	.234-.265	9/16	.602	.312	.290	.386	.343	.406

ORDERING INFORMATION

XXX–XX	XX	XXXX	X
Basic No & Part No	Material	Thd	Finish
Example			
216–01	**SS**	**1024**	✻

✻ For Finish Code See **Fold-Out** Inside Back Cover

MATERIAL	CODE
Brass	BR
Stainless Steel	SS
Steel	ST