

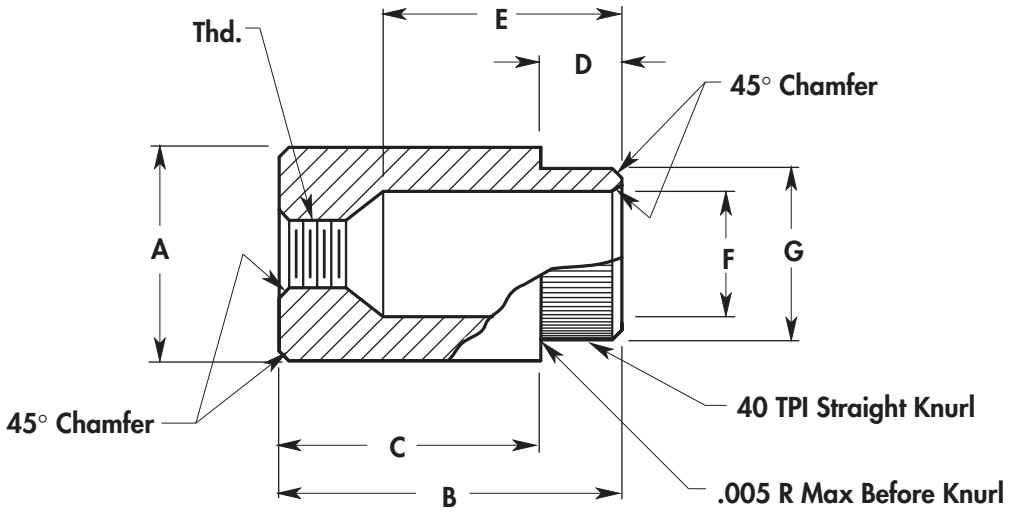

BASIC NO.	PART NO.	THD. SIZE	PANEL THICKNESS	A ±.004	B ±.010	C ±.005	D ±.005	E ±.005	F +.004 -.001	G ±.005
214	01	10-32	.048-.072	3/8	3/8	.325	.050	.236	.228	.280
214	02	10-32	.074-.109	3/8	3/8	.295	.080	.236	.228	.280
214	03	10-32	.119-.156	3/8	3/8	.250	.125	.236	.228	.280
214	04	10-32	.188	3/8	3/8	.187	.188	.236	.228	.280
214	05	10-32	.250	3/8	3/8	.125	.250	.236	.228	.280
214	06	1/4-28	.048-.072	1/2	7/16	.387	.050	.292	.295	.366
214	07	1/4-28	.074-.109	1/2	7/16	.357	.080	.292	.295	.366
214	08	1/4-28	.119-.156	1/2	7/16	.312	.125	.292	.295	.366
214	09	1/4-28	.188	1/2	7/16	.249	.188	.292	.295	.366
214	10	1/4-28	.250	1/2	7/16	.187	.250	.292	.295	.366

MATERIAL	CODE
Brass	BR
Stainless Steel	SS
Steel	ST

ORDERING INFORMATION

XXX–XX	XX	XXXX	X
Basic No & Part No	Material	Thd	Finish
Example			
214–09	**SS**	**1/428**	✻

✻ For Finish Code See **Fold-Out** Inside Back Cover