PANEL SCREW RETAINER *TYPE 1-NC SERIES*

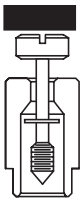

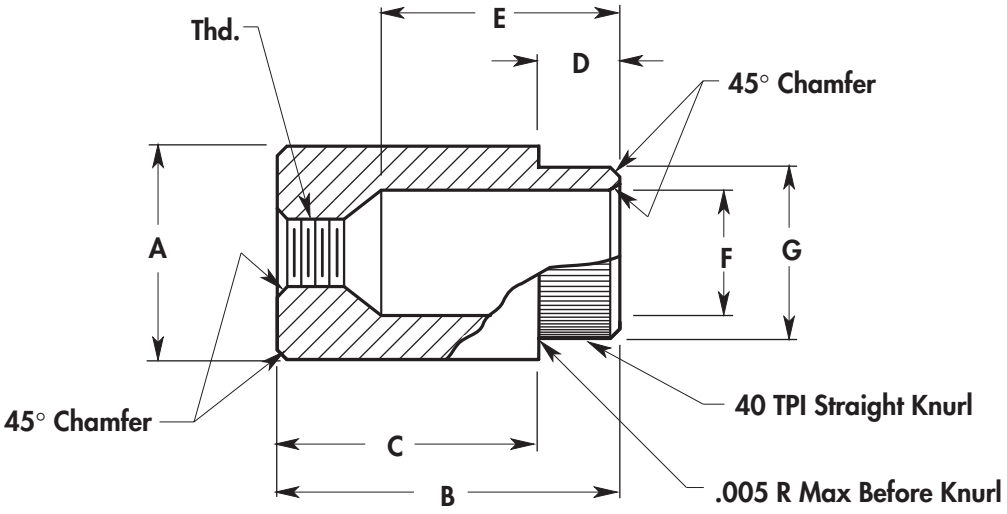

BASIC NO.	PART NO.	THD. SIZE	PANEL THICKNESS	A ±.004	B ±.010	C ±.005	D ±.005	E ±.005	F +.004 -.001	G ±.005
213	01	4-40	.048-.072	1/4	1/4	.200	.050	.164	.150	.198
213	02	4-40	074-.109	1/4	1/4	.170	.080	.164	.150	.198
213	03	4-40	.119-.156	1/4	1/4	.125	.125	.164	.150	.198
213	04	6-32	.048-.072	1/4	5/16	.262	.050	.210	.150	.198
213	05	6-32	.074-.109	1/4	5/16	.232	.080	.210	.150	.198
213	06	6-32	.119-.156	1/4	5/16	.187	.125	.210	.150	.198
213	07	6-32	.188	1/4	5/16	.124	.188	.210	.150	.198
213	08	8-32	.048-.072	5/16	5/16	.262	.050	.208	.188	.228
213	09	8-32	.074-.109	5/16	5/16	.232	.080	.208	.188	.228
213	10	8-32	.119-.156	5/16	5/16	.187	.125	.208	.188	.228
213	11	8-32	.188	5/16	5/16	.134	.188	.208	.188	.228
213	12	10-24	.048-.072	3/8	3/8	.325	.050	.236	.228	.280
213	13	10-24	.074-.109	3/8	3/8	.295	.080	.236	.228	.280
213	14	10-24	.119-.156	3/8	3/8	.250	.125	.236	.228	.280
213	15	10-24	.188	3/8	3/8	.187	.188	.236	.228	.280
213	16	10-24	.250	3/8	3/8	.125	.250	.236	.228	.280
213	17	1/4-20	.048-.072	1/2	7/16	.387	.050	.292	.295	.366
213	18	1/4-20	.074-.109	1/2	7/16	.357	.080	.292	.295	.366
213	19	1/4-20	.119-.156	1/2	7/16	.312	.125	.292	.295	.366
213	20	1/4-20	.188	1/2	7/16	.249	.188	.292	.295	.366
213	21	1/4-20	.250	1/2	7/16	.187	.250	.292	.295	.366
213	22	5/16-18	.048-.072	5/8	1/2	.450	.050	.358	.347	.414
213	23	5/16-18	.074-.109	5/8	1/2	.420	.080	.358	.347	.414
213	24	5/16-18	.119-.156	5/8	1/2	.375	.125	.358	.347	.414
213	25	5/16-18	.188	5/8	1/2	.312	.188	.358	.347	.414
213	26	5/16-18	.250	5/8	1/2	.250	.250	.358	.347	.414
213	27	3/8-16	.074-.109	3/4	9/16	.482	.080	.418	.406	.479
213	28	3/8-16	.119-.156	3/4	9/16	.437	.125	.418	.406	.479
213	29	3/8-16	.188	3/4	9/16	.374	.188	.418	.406	.479
213	30	3/8-16	.250	3/4	9/16	.312	.250	.418	.406	.479

MATERIAL	CODE
Brass	BR
Stainless Steel	SS
Steel	ST

ORDERING INFORMATION

XXX–XX	XX	XXXX	X
Basic No & Part No	Material	Thd	Finish

Example

213–09	SS	832	✻

✻ For Finish Code See **Fold-Out** Inside Back Cover