CAPTIVE PANEL SCREW *TYPE 3-NF SERIES*

199 *10-32*

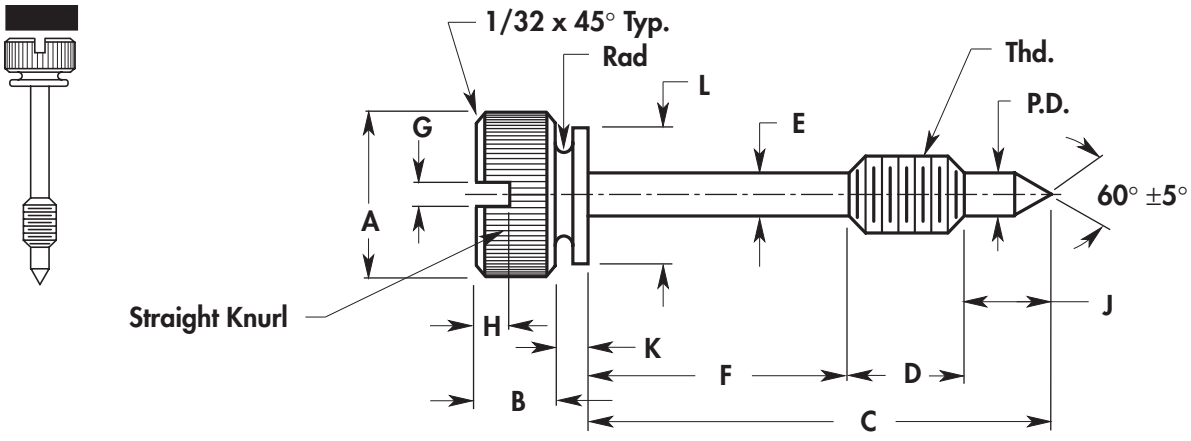

BASIC NO.	PART NO.	THD. SIZE	A +.015 -.000	B ±.010	C ±.015	D +.000 -.010	E ±.005	F ±.010	P.D. +.000 -.010	G +.005 -.000	H +.010 -.000	J ±.015	K ±.010	L ±.010	KNURL TPI
199	01	10-32	1/2	3/16	1/2	1/4	.130	1/8	.130	1/16	3/32	1/8	1/16	13/32	30
199	02	10-32	1/2	3/16	9/16	1/4	.130	3/16	.130	1/16	3/32	1/8	1/16	13/32	30
199	03	10-32	1/2	3/16	5/8	1/4	.130	1/4	.130	1/16	3/32	1/8	1/16	13/32	30
199	04	10-32	1/2	3/16	11/16	1/4	.130	5/16	.130	1/16	3/32	1/8	1/16	13/32	30
199	05	10-32	1/2	3/16	3/4	1/4	.130	3/8	.130	1/16	3/32	1/8	1/16	13/32	30
199	06	10-32	1/2	3/16	13/16	1/4	.130	7/16	.130	1/16	3/32	1/8	1/16	13/32	30
199	07	10-32	1/2	3/16	7/8	1/4	.130	1/2	.130	1/16	3/32	1/8	1/16	13/32	30
199	08	10-32	1/2	3/16	15/16	1/4	.130	9/16	.130	1/16	3/32	1/8	1/16	13/32	30
199	**09**	**10-32**	**1/2**	**3/16**	**1"**	**1/4**	**.130**	**5/8**	**.130**	**1/16**	**3/32**	**1/8**	**1/16**	**13/32**	**30**
199	10	10-32	1/2	3/16	1-1/16	1/4	.130	11/16	.130	1/16	3/32	1/8	1/16	13/32	30
199	11	10-32	1/2	3/16	1-1/8	1/4	.130	3/4	.130	1/16	3/32	1/8	1/16	13/32	30
199	12	10-32	1/2	3/16	1-3/16	1/4	.130	13/16	.130	1/16	3/32	1/8	1/16	13/32	30
199	13	10-32	1/2	3/16	1-1/4	1/4	.130	7/8	.130	1/16	3/32	1/8	1/16	13/32	30
199	14	10-32	1/2	3/16	1-5/16	1/4	.130	15/16	.130	1/16	3/32	1/8	1/16	13/32	30
199	15	10-32	1/2	3/16	1-3/8	1/4	.130	1"	.130	1/16	3/32	1/8	1/16	13/32	30
199	16	10-32	1/2	3/16	1-7/16	1/4	.130	1-1/16	.130	1/16	3/32	1/8	1/16	13/32	30
199	17	10-32	1/2	3/16	1-1/2	1/4	.130	1-1/8	.130	1/16	3/32	1/8	1/16	13/32	30

MATERIAL	CODE
Brass	BR
Stainless Steel	SS
Steel	ST

ORDERING INFORMATION

XXX–XX	XX	XXXX	X
Basic No & Part No	Material	Thd	Finish
Example			
199–01	**SS**	**1032**	✻

✻ For Finish Code See **Fold-Out** Inside Back Cover

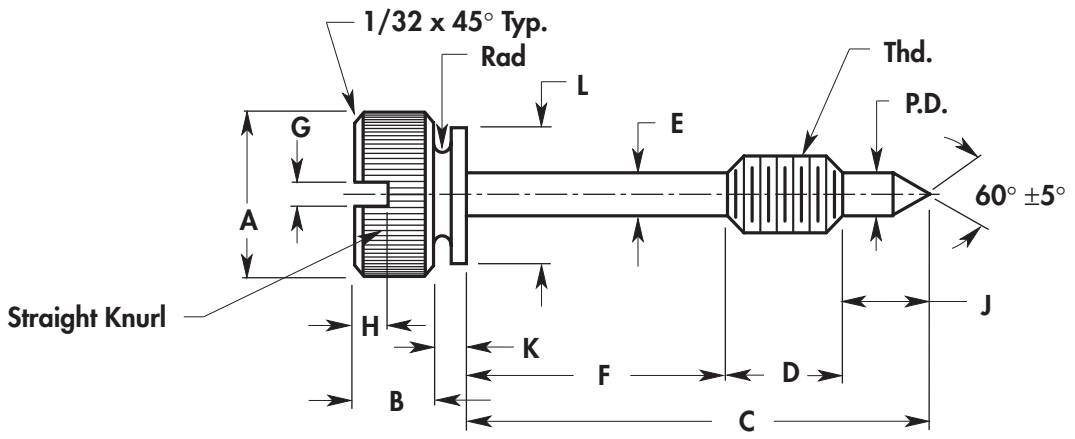

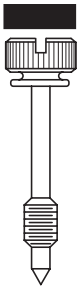

BASIC NO.	PART NO.	THD. SIZE	A +.015 -.000	B ±.010	C ±.015	D +.000 -.010	E ±.005	F ±.010	P.D. +.000 -.010	G +.005 -.000	H +.010 -.000	J ±.015	K ±.010	L ±.010	KNURL TPI
200	01	10-32	5/8	3/16	1/2	1/4	.130	1/8	.130	1/16	3/32	1/8	1/16	1/2	30
200	02	10-32	5/8	3/16	9/16	1/4	.130	3/16	.130	1/16	3/32	1/8	1/16	1/2	30
200	03	10-32	5/8	3/16	5/8	1/4	.130	1/4	.130	1/16	3/32	1/8	1/16	1/2	30
200	04	10-32	5/8	3/16	11/16	1/4	.130	5/16	.130	1/16	3/32	1/8	1/16	1/2	30
200	05	10-32	5/8	3/16	3/4	1/4	.130	3/8	.130	1/16	3/32	1/8	1/16	1/2	30
200	06	10-32	5/8	3/16	13/16	1/4	.130	7/16	.130	1/16	3/32	1/8	1/16	1/2	30
200	07	10-32	5/8	3/16	7/8	1/4	.130	1/2	.130	1/16	3/32	1/8	1/16	1/2	30
200	08	10-32	5/8	3/16	15/16	1/4	.130	9/16	.130	1/16	3/32	1/8	1/16	1/2	30
200	**09**	**10-32**	**5/8**	**3/16**	**1"**	**1/4**	**.130**	**5/8**	**.130**	**1/16**	**3/32**	**1/8**	**1/16**	**1/2**	**30**
200	10	10-32	5/8	3/16	1-1/16	1/4	.130	11/16	.130	1/16	3/32	1/8	1/16	1/2	30
200	11	10-32	5/8	3/16	1-1/8	1/4	.130	3/4	.130	1/16	3/32	1/8	1/16	1/2	30
200	12	10-32	5/8	3/16	1-3/16	1/4	.130	13/16	.130	1/16	3/32	1/8	1/16	1/2	30
200	13	10-32	5/8	3/16	1-1/4	1/4	.130	7/8	.130	1/16	3/32	1/8	1/16	1/2	30
200	14	10-32	5/8	3/16	1-5/16	1/4	.130	15/16	.130	1/16	3/32	1/8	1/16	1/2	30
200	15	10-32	5/8	3/16	1-3/8	1/4	.130	1"	.130	1/16	3/32	1/8	1/16	1/2	30
200	16	10-32	5/8	3/16	1-7/16	1/4	.130	1-1/16	.130	1/16	3/32	1/8	1/16	1/2	30
200	17	10-32	5/8	3/16	1-1/2	1/4	.130	1-1/8	.130	1/16	3/32	1/8	1/16	1/2	30

ORDERING INFORMATION

XXX–XX	XX	XXXX	X
Basic No & Part No	Material	Thd	Finish
Example			
200–01	**SS**	**1032**	✻

✻ For Finish Code See **Fold-Out** Inside Back Cover

MATERIAL	CODE
Brass	BR
Stainless Steel	SS
Steel	ST