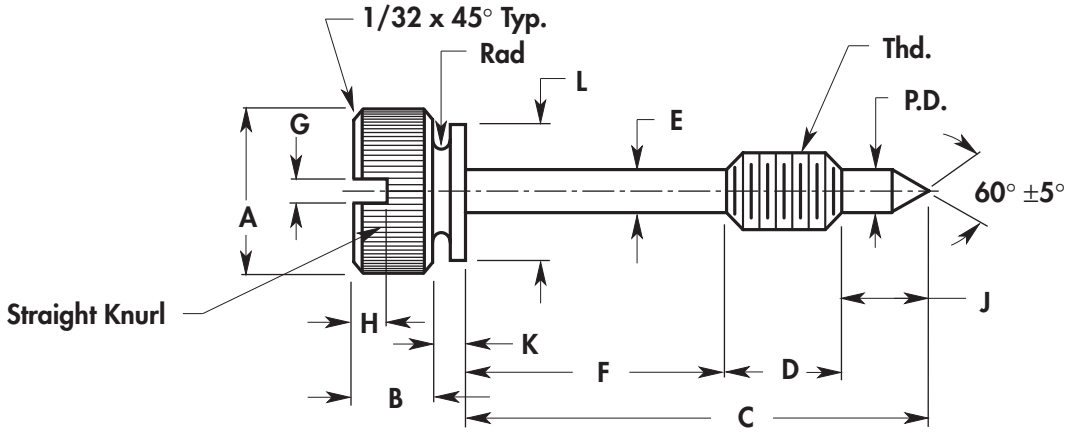

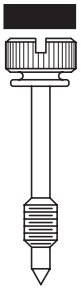

BASIC NO.	PART NO.	THD. SIZE	A +.015 -.000	B ±.010	C ±.015	D +.000 -.010	E ±.005	F ±.010	P.D. +.000 -.010	G +.005 -.000	H +.010 -.000	J ±.015	K ±.010	L ±.010	KNURL TPI
194	01	10-24	1/2	3/16	1/2	1/4	.130	1/8	.130	1/16	3/32	1/8	1/16	13/32	30
194	02	10-24	1/2	3/16	9/16	1/4	.130	3/16	.130	1/16	3/32	1/8	1/16	13/32	30
194	03	10-24	1/2	3/16	5/8	1/4	.130	1/4	.130	1/16	3/32	1/8	1/16	13/32	30
194	04	10-24	1/2	3/16	11/16	1/4	.130	5/16	.130	1/16	3/32	1/8	1/16	13/32	30
194	05	10-24	1/2	3/16	3/4	1/4	.130	3/8	.130	1/16	3/32	1/8	1/16	13/32	30
194	06	10-24	1/2	3/16	13/16	1/4	.130	7/16	.130	1/16	3/32	1/8	1/16	13/32	30
194	07	10-24	1/2	3/16	7/8	1/4	.130	1/2	.130	1/16	3/32	1/8	1/16	13/32	30
194	08	10-24	1/2	3/16	15/16	1/4	.130	9/16	.130	1/16	3/32	1/8	1/16	13/32	30
194	**09**	**10-24**	**1/2**	**3/16**	**1"**	**1/4**	**.130**	**5/8**	**.130**	**1/16**	**3/32**	**1/8**	**1/16**	**13/32**	**30**
194	10	10-24	1/2	3/16	1-1/16	1/4	.130	11/16	.130	1/16	3/32	1/8	1/16	13/32	30
194	11	10-24	1/2	3/16	1-1/8	1/4	.130	3/4	.130	1/16	3/32	1/8	1/16	13/32	30
194	12	10-24	1/2	3/16	1-3/16	1/4	.130	13/16	.130	1/16	3/32	1/8	1/16	13/32	30
194	13	10-24	1/2	3/16	1-1/4	1/4	.130	7/8	.130	1/16	3/32	1/8	1/16	13/32	30
194	14	10-24	1/2	3/16	1-5/16	1/4	.130	15/16	.130	1/16	3/32	1/8	1/16	13/32	30
194	15	10-24	1/2	3/16	1-3/8	1/4	.130	1"	.130	1/16	3/32	1/8	1/16	13/32	30
194	16	10-24	1/2	3/16	1-7/16	1/4	.130	1-1/16	.130	1/16	3/32	1/8	1/16	13/32	30
194	17	10-24	1/2	3/16	1-1/2	1/4	.130	1-1/8	.130	1/16	3/32	1/8	1/16	13/32	30

ORDERING INFORMATION

XXX–XX	XX	XXXX	X
Basic No & Part No	Material	Thd	Finish
Example			
194–04	**ST**	**1024**	✻

✻ For Finish Code See **Fold-Out** Inside Back Cover

MATERIAL	CODE
Brass	BR
Stainless Steel	SS
Steel	ST

CAPTIVE PANEL SCREW *TYPE 3-NC SERIES*

195 *10-24*

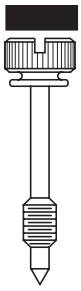

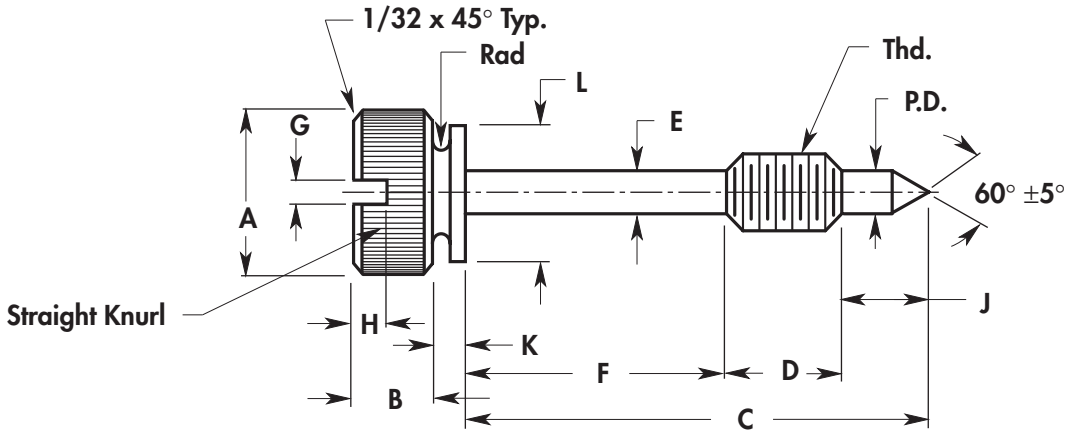

BASIC NO.	PART NO.	THD. SIZE	A +.015 -.000	B ±.010	C ±.015	D +.000 -.010	E ±.005	F ±.010	P.D. +.000 -.010	G +.005 -.000	H +.010 -.000	J ±.015	K ±.010	L ±.010	KNURL TPI
195	01	10-24	5/8	3/16	1/2	1/4	.130	1/8	.130	1/16	3/32	1/8	1/16	1/2	30
195	02	10-24	5/8	3/16	9/16	1/4	.130	3/16	.130	1/16	3/32	1/8	1/16	1/2	30
195	03	10-24	5/8	3/16	5/8	1/4	.130	1/4	.130	1/16	3/32	1/8	1/16	1/2	30
195	04	10-24	5/8	3/16	11/16	1/4	.130	5/16	.130	1/16	3/32	1/8	1/16	1/2	30
195	05	10-24	5/8	3/16	3/4	1/4	.130	3/8	.130	1/16	3/32	1/8	1/16	1/2	30
195	06	10-24	5/8	3/16	13/16	1/4	.130	7/16	.130	1/16	3/32	1/8	1/16	1/2	30
195	07	10-24	5/8	3/16	7/8	1/4	.130	1/2	.130	1/16	3/32	1/8	1/16	1/2	30
195	08	10-24	5/8	3/16	15/16	1/4	.130	9/16	.130	1/16	3/32	1/8	1/16	1/2	30
195	**09**	**10-24**	**5/8**	**3/16**	**1"**	**1/4**	**.130**	**5/8**	**.130**	**1/16**	**3/32**	**1/8**	**1/16**	**1/2**	**30**
195	10	10-24	5/8	3/16	1-1/16	1/4	.130	11/16	.130	1/16	3/32	1/8	1/16	1/2	30
195	11	10-24	5/8	3/16	1-1/8	1/4	.130	3/4	.130	1/16	3/32	1/8	1/16	1/2	30
195	12	10-24	5/8	3/16	1-3/16	1/4	.130	13/16	.130	1/16	3/32	1/8	1/16	1/2	30
195	13	10-24	5/8	3/16	1-1/4	1/4	.130	7/8	.130	1/16	3/32	1/8	1/16	1/2	30
195	14	10-24	5/8	3/16	1-5/16	1/4	.130	15/16	.130	1/16	3/32	1/8	1/16	1/2	30
195	15	10-24	5/8	3/16	1-3/8	1/4	.130	1"	.130	1/16	3/32	1/8	1/16	1/2	30
195	16	10-24	5/8	3/16	1-7/16	1/4	.130	1-1/16	.130	1/16	3/32	1/8	1/16	1/2	30
195	17	10-24	5/8	3/16	1-1/2	1/4	.130	1-1/8	.130	1/16	3/32	1/8	1/16	1/2	30

MATERIAL	CODE
Brass	BR
Stainless Steel	SS
Steel	ST

ORDERING INFORMATION

XXX–XX	XX	XXXX	X
Basic No & Part No	Material	Thd	Finish
Example			
195–04	**ST**	**1024**	✻

✻ For Finish Code See **Fold-Out** Inside Back Cover