CAPTIVE PANEL SCREW *TYPE 2-NC SERIES*

183 *8-32*

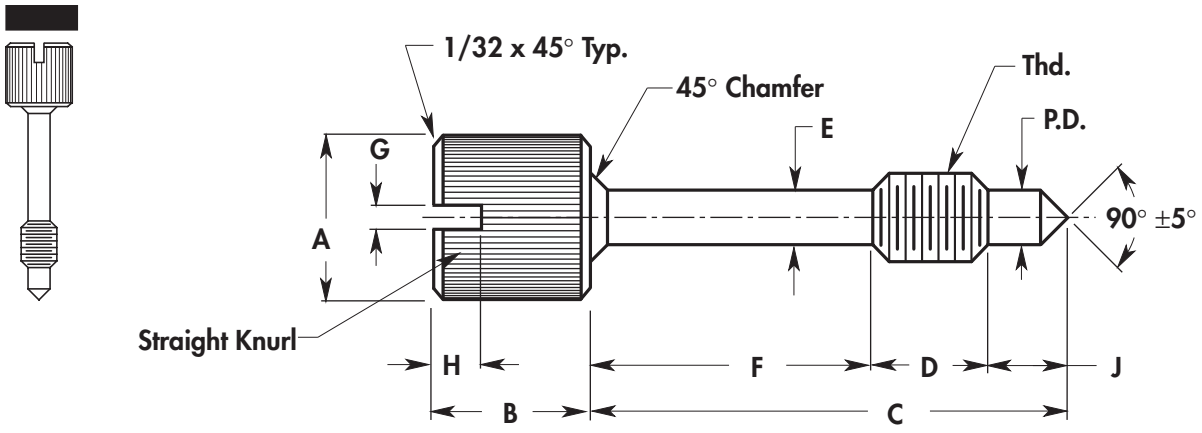

BASIC NO.	PART NO.	THD. SIZE	A +.015 -.000	B ±.010	C ±.015	D +.000 -.015	E ±.005	F ±.010	P.D. +.000 -.010	G +.005 -.000	H +.010 -.000	J ±.015	KNURL TPI
183	01	8-32	5/16	5/16	7/16	7/32	.120	1/8	.120	3/64	5/64	3/32	35
183	02	8-32	5/16	5/16	1/2	7/32	.120	3/16	.120	3/64	5/64	3/32	35
183	03	8-32	5/16	5/16	9/16	7/32	.120	1/4	.120	3/64	5/64	3/32	35
183	04	8-32	5/16	5/16	5/8	7/32	.120	5/16	.120	3/64	5/64	3/32	35
183	05	8-32	5/16	5/16	11/16	7/32	.120	3/8	.120	3/64	5/64	3/32	35
183	06	8-32	5/16	5/16	3/4	7/32	.120	7/16	.120	3/64	5/64	3/32	35
183	07	8-32	5/16	5/16	13/16	7/32	.120	1/2	.120	3/64	5/64	3/32	35
183	08	8-32	5/16	5/16	7/8	7/32	.120	9/16	.120	3/64	5/64	3/32	35
183	09	8-32	5/16	5/16	15/16	7/32	.120	5/8	.120	3/64	5/64	3/32	35
183	**10**	**8-32**	**5/16**	**5/16**	**1"**	**7/32**	**.120**	**11/16**	**.120**	**3/64**	**5/64**	**3/32**	**35**
183	11	8-32	5/16	5/16	1-1/16	7/32	.120	3/4	.120	3/64	5/64	3/32	35
183	12	8-32	5/16	5/16	1-1/8	7/32	.120	13/16	.120	3/64	5/64	3/32	35
183	13	8-32	5/16	5/16	1-3/16	7/32	.120	7/8	.120	3/64	5/64	3/32	35
183	14	8-32	5/16	5/16	1-1/4	7/32	.120	15/16	.120	3/64	5/64	3/32	35

MATERIAL	CODE
Brass	BR
Stainless Steel	SS
Steel	ST

ORDERING INFORMATION

XXX?XX	XX	XXXX	X
Basic No & Part No	Material	Thd	Finish
Example			
183?04	**ST**	**832**	✻

✻ For Finish Code See **Fold-Out** Inside Back Cover