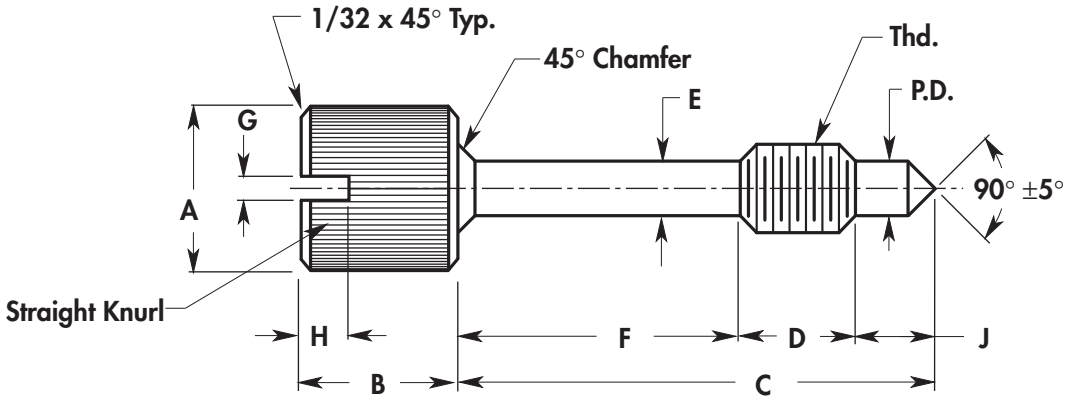

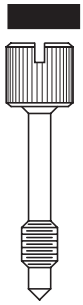

BASIC NO.	PART NO.	THD. SIZE	A +.015 -.000	B ±.010	C ±.015	D +.000 -.015	E ±.005	F ±.010	P.D. +.000 -.010	G +.005 -.000	H +.010 -.000	J ±.015	KNURL TPI
182	01	6-32	5/16	5/16	7/16	7/32	.095	1/8	.095	3/64	5/64	3/32	35
182	02	6-32	5/16	5/16	1/2	7/32	.095	3/16	.095	3/64	5/64	3/32	35
182	03	6-32	5/16	5/16	9/16	7/32	.095	1/4	.095	3/64	5/64	3/32	35
182	04	6-32	5/16	5/16	5/8	7/32	.095	5/16	.095	3/64	5/64	3/32	35
182	05	6-32	5/16	5/16	11/16	7/32	.095	3/8	.095	3/64	5/64	3/32	35
182	06	6-32	5/16	5/16	3/4	7/32	.095	7/16	.095	3/64	5/64	3/32	35
182	07	6-32	5/16	5/16	13/16	7/32	.095	1/2	.095	3/64	5/64	3/32	35
182	08	6-32	5/16	5/16	7/8	7/32	.095	9/16	.095	3/64	5/64	3/32	35
182	09	6-32	5/16	5/16	15/16	7/32	.095	5/8	.095	3/64	5/64	3/32	35
182	**10**	**6-32**	**5/16**	**5/16**	**1"**	**7/32**	**.095**	**11/16**	**.095**	**3/64**	**5/64**	**3/32**	**35**
182	11	6-32	5/16	5/16	1-1/16	7/32	.095	3/4	.095	3/64	5/64	3/32	35
182	12	6-32	5/16	5/16	1-1/8	7/32	.095	13/16	.095	3/64	5/64	3/32	35
182	13	6-32	5/16	5/16	1-3/16	7/32	.095	7/8	.095	3/64	5/64	3/32	35
182	14	6-32	5/16	5/16	1-1/4	7/32	.095	15/16	.095	3/64	5/64	3/32	35

/ORDERING INFORMATION

XXX?XX	XX	XXXX	X
Basic No & Part No	Material	Thd	Finish
Example			
182?04	**ST**	**632**	✻

✻ For Finish Code See **Fold-Out** Inside Back Cover

MATERIAL	CODE
Brass	BR
Stainless Steel	SS
Steel	ST