ROUND SWAGE STANDOFFS *Partial Knurled*

147

193-223 3/8"

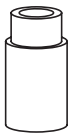

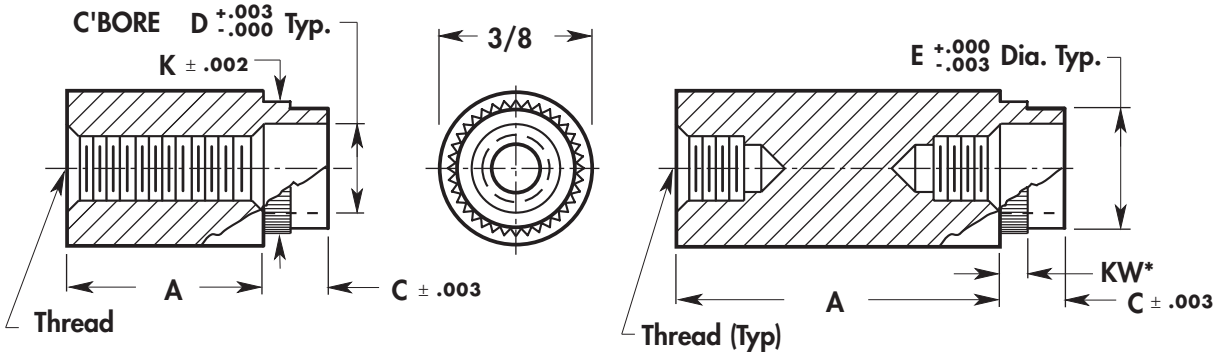

*KW dim same as board thickness

DEPTH OF THREADS TAPPED THRU			
THREAD	**ALUM • BRASS NYLON • STEEL**	**STAINLESS STEEL**	**SCREW DEPTH**
6-32	1"	1"	3/8
8-32	1"	1"	7/16
10-32	1-1/8	1"	1/2

SWAGE LENGTH C ±.003	CODE	BOARD THICKNESS
.075	1	1/32
.105	2	1/16
.135	3	3/32
.165	4	1/8

MATERIAL	CODE
Aluminum	AL
Brass	BR
Stainless Steel	SS
Steel	ST

BASIC NO.	PART NO.	A LENGTH	C'BORE D	DIA E	KNURL K
147	**193**	**1/8**			
147	**194**	**3/16**			
147	**195**	**1/4**			
147	**196**	**5/16**			
147	**197**	**3/8**			
147	**198**	**7/16**			
147	**199**	**1/2**			
147	**200**	**9/16**			
147	**201**	**5/8**			
147	**202**	**11/16**			
147	**203**	**3/4**			
147	**204**	**13/16**			
147	**205**	**7/8**			
147	**206**	**15/16**			
147	**207**	**1"**			
147	**208**	**1-1/16**	**.200**	**.234**	**.247**
147	**209**	**1-1/8**			
147	**210**	**1-3/16**			
147	**211**	**1-1/4**			
147	**212**	**1-5/16**			
147	**213**	**1-3/8**			
147	**214**	**1-7/16**			
147	**215**	**1-1/2**			
147	**216**	**1-9/16**			
147	**217**	**1-5/8**			
147	**218**	**1-11/16**			
147	**219**	**1-3/4**			
147	**220**	**1-13/16**			
147	**221**	**1-7/8**			
147	**222**	**1-15/16**			
147	**223**	**2"**			

ORDERING INFORMATION

XXX–XX	XX	XXX	X	X
Basic No & Part No	Material	Thd.	C	Finish
	Example			
147–220	**ST**	**632**	**3**	*

* For Finish Code See **Fold-Out** Inside Back Cover