Partial Knurled ROUND SWAGE STANDOFFS

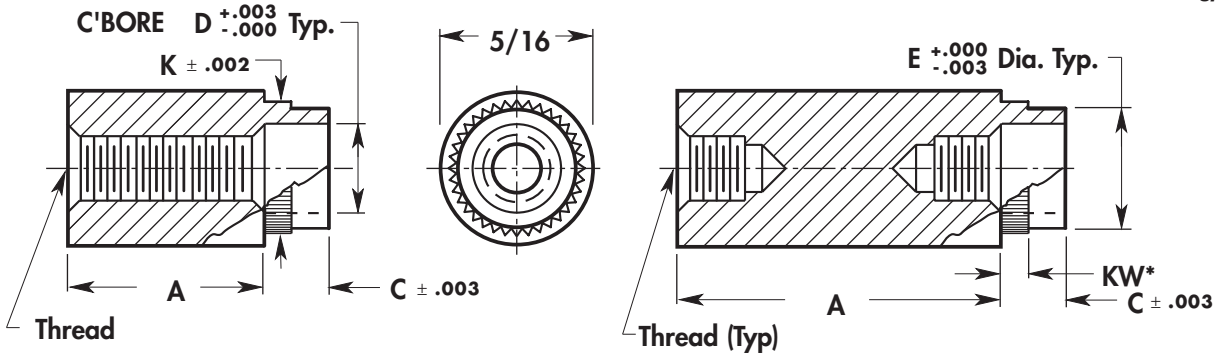

*KW dim same as board thickness

DEPTH OF THREADS TAPPED THRU			
THREAD	**ALUM • BRASS NYLON • STEEL**	**STAINLESS STEEL**	**SCREW DEPTH**
6-32	1"	1"	3/8
8-32	1"	1"	7/16
10-32	1-1/8	1"	1/2

BASIC NO.	PART NO.	A LENGTH	C'BORE D	DIA E	KNURL K
147	**162**	**1/8**			
147	**163**	**3/16**			
147	**164**	**1/4**			
147	**165**	**5/16**			
147	**166**	**3/8**			
147	**167**	**7/16**			
147	**168**	**1/2**			
147	**169**	**9/16**			
147	**170**	**5/8**			
147	**171**	**11/16**			
147	**172**	**3/4**			
147	**173**	**13/16**			
147	**174**	**7/8**			
147	**175**	**15/16**			
147	**176**	**1"**			
147	**177**	**1-1/16**	**.200**	**.234**	**.247**
147	**178**	**1-1/8**			
147	**179**	**1-3/16**			
147	**180**	**1-1/4**			
147	**181**	**1-5/16**			
147	**182**	**1-3/8**			
147	**183**	**1-7/16**			
147	**184**	**1-1/2**			
147	**185**	**1-9/16**			
147	**186**	**1-5/8**			
147	**187**	**1-11/16**			
147	**188**	**1-3/4**			
147	**189**	**1-13/16**			
147	**190**	**1-7/8**			
147	**191**	**1-15/16**			
147	**192**	**2"**			

SWAGE LENGTH C ±.003	CODE	BOARD THICKNESS
.075	1	1/32
.105	2	1/16
.135	3	3/32
.165	4	1/8

MATERIAL	CODE
Aluminum	AL
Brass	BR
Stainless Steel	SS
Steel	ST

ORDERING INFORMATION

XXX–XX	XX	XXX	X	X
Basic No & Part No	Material	Thd.	C	Finish
	Example			
147–166	**ST**	**632**	**3**	✻

✻ For Finish Code See **Fold-Out** Inside Back Cover