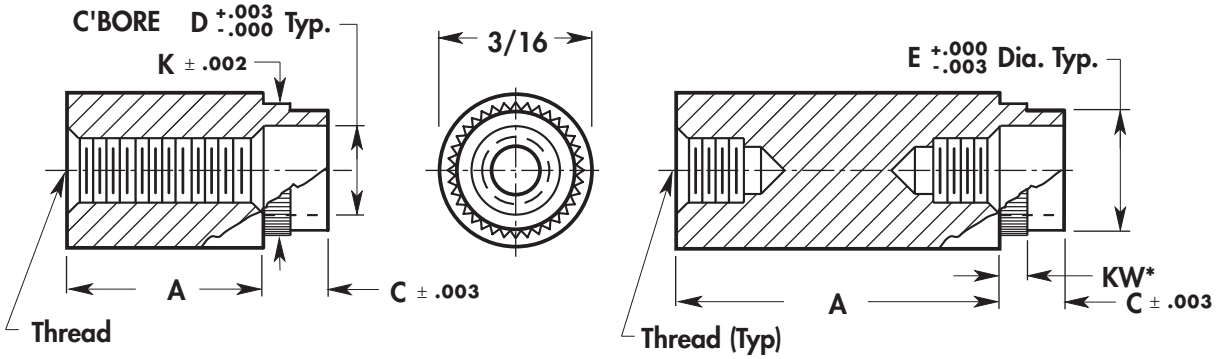

*KW dim same as board thickness

DEPTH OF THREADS TAPPED THRU			
THREAD	**ALUM • BRASS NYLON • STEEL**	**STAINLESS STEEL**	**SCREW DEPTH**
2-56	3/4	5/8	3/16
4-40	1	3/4	1/4

BASIC NO.	PART NO.	A LENGTH	C'BORE D	DIA E	KNURL K
147	**100**	**1/8**			
147	**101**	**3/16**			
147	**102**	**1/4**			
147	**103**	**5/16**			
147	**104**	**3/8**			
147	**105**	**7/16**			
147	**106**	**1/2**			
147	**107**	**9/16**			
147	**108**	**5/8**			
147	**109**	**11/16**			
147	**110**	**3/4**			
147	**111**	**13/16**			
147	**112**	**7/8**			
147	**113**	**15/16**			
147	**114**	**1"**			
147	**115**	**1-1/16**	**.115**	**.139**	**.152**
147	**116**	**1-1/8**			
147	**117**	**1-3/16**			
147	**118**	**1-1/4**			
147	**119**	**1-5/16**			
147	**120**	**1-3/8**			
147	**121**	**1-7/16**			
147	**122**	**1-1/2**			
147	**123**	**1-9/16**			
147	**124**	**1-5/8**			
147	**125**	**1-11/16**			
147	**126**	**1-3/4**			
147	**127**	**1-13/16**			
147	**128**	**1-7/8**			
147	**129**	**1-15/16**			
147	**130**	**2"**			

SWAGE LENGTH C ±.003	CODE	BOARD THICKNESS
.075	1	1/32
.105	2	1/16
.135	3	3/32
.165	4	1/8

MATERIAL	CODE
Aluminum	AL
Brass	BR
Stainless Steel	SS
Steel	ST

ORDERING INFORMATION

XXX–XX	XX	XXX	X	X
Basic No & Part No	Material	Thd.	C	Finish
Example				
147–110	**ST**	**440**	**3**	*****

* For Finish Code See **Fold-Out** Inside Back Cover